ProtoDrive: An Experimental Platform for Electric Vehicle Energy Scheduling and Control

Stephanie Diaz Harsh Jain Yash Pant William Price Rahul Mangharam
Dept. Electrical & System Engineering
University of Pennsylvania
{sdiaz, harjain, yashpant, wprice, rahulm}@seas.upenn.edu

Categories and Subject Descriptors

B.8 [**Performance of Systems**]: B.8.1 Reliability, Testing, and Fault-Tolerance

General Terms

Experimentation, Reliability, Performance

Keywords

Real-time scheduling, control systems, electric vehicles

1. INTRODUCTION

Vehicles involved in urban commutes are subjected to highly variable loads as they traverse varying gradients and stop-and-go traffic. Electric Vehicles can achieve a high efficiency under these conditions due to their ability to recover energy during braking. However, the high current loads during both charging and discharging cause battery energy losses, making them less efficient and degrading their useful lifetime. Super capacitors work well under high power charge and discharge cycles, however, their high cost and low energy density prevent them from being a viable replacement for batteries. A hybrid system consisting of a battery and a super capacitor has the potential to offer the benefits of both devices, which may increase vehicle range and battery lifetime. Consequently, the goal of the project is to: (a) investigate the use of a hybrid battery/super capacitor system in response to real commuter drive cycles. (b) develop scheduling algorithms that optimize the flow of energy between the battery, super capacitor and motor.

In order to simulate a battery/super capacitor system in software, it is necessary to know a vehicle's physical parameters as well as the velocity profile, altitude and weather conditions of the route followed. This information can be obtained from conventional internal combustion engine cars outfitted with a GPS unit, and CMU's ChargeCar project has already collected this data for many cars, all over the US. Additionally, they have written software to simulate the vehicle's performance if it were electric, and also if it had a super capacitor. This software demonstrated that there can be a significant reduction in the duty of a battery by using a super capacitor, and that this reduction is highly dependent on the route travelled.

Permission to make digital or hard copies of all or part of this work for personal or classroom use is granted without fee provided that copies are not made or distributed for profit or commercial advantage and that copies bear this notice and the full citation on the first page. To copy otherwise, to republish, to post on servers or to redistribute to lists, requires prior specific permission and/or a fee.
RTSS@WORK'12, Dec 4–7, 2012, San Juan, Puerto Rico
Copyright 200X ACM X-XXXXX-XX-X/XX/XX ...$10.00.

2. PROTODRIVE PLATFORM OVERVIEW

A software simulation of a drive cycle provides some good insight into the problem but the model may be somewhat idealized and omits the intricacies that are present in a real vehicle. However, it is both time and cost intensive to build a real battery and super capacitor vehicle and attempt to drive the multitude of real commuting routes for the sake of predicting how such a vehicle would perform on the given route. Additionally, using a human as the controller of the vehicle makes it difficult to produce repeatable results. For example, it would be very difficult to drive the exact same velocity profile twice on a real road using a person as the controller.

To this effect, we are developing a low cost, small-scale electric vehicle platform called ProtoDrive which is capable of simulating a drive cycle in hardware, while remaining small enough to fit on a lab desk. It consists of a physical model of an electric vehicle powertrain (motor, controller, battery, super capacitor) coupled to an active dynamometer, making it possible to run the powertrain through its full speed and torque range. Electronic control of the platform enables consistent testing conditions and fair comparison between battery and hybrid systems, and simulation in hardware will capture elements of the real system that may be missed in an idealized software model.

3. PROTODRIVE – SYSTEM EVALUATION

In our demonstration, a velocity profile, altitude data, vehicle parameters and weather data will be used as inputs to generate a scaled torque and speed profile which will be run on the ProtoDrive hardware. Various power distribution schedules are being implemented over the drive cycle, enabling the comparison of a hybrid system to a battery-only system, or the comparison of various current distribution algorithms. The output will show the current load on the battery and the super capacitor, which can be used to determine the batteryÕs State of Charge and the efficiency of the vehicle. Ultimately, we aim to determine if a battery/supercapacitor system offers significant benefits over a battery-only system, by simulating real commuting routes in hardware.

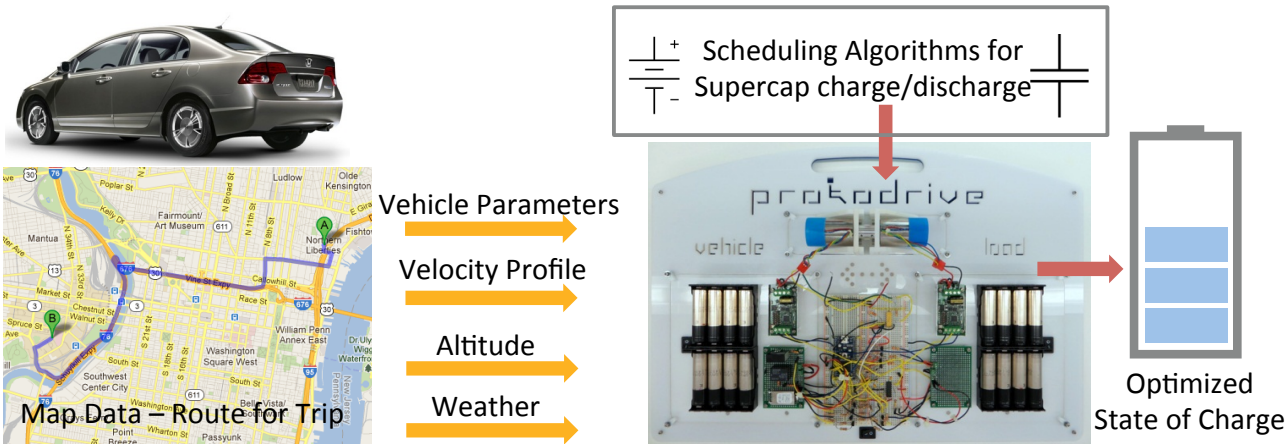

Figure 1: ProtoDrive Overview showing the inputs of real vehicle parameters, an actual trip from Google Maps with altitude and traffic data, and weather data. The ProtoDrive platform runs a scaled version of the actual drive cycle with various battery/super capacitor charging/discharging schedules to maximize the battery's state of charge and minimize the peak current demand.

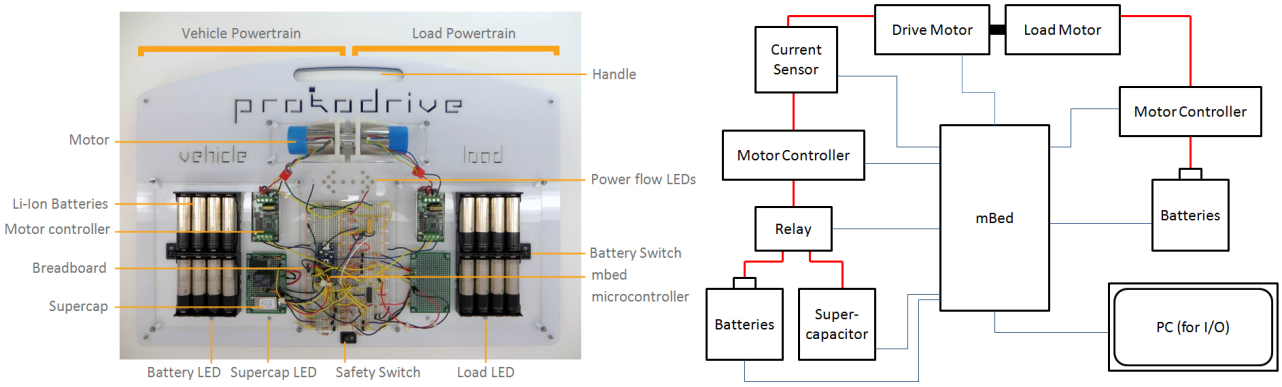

Figure 2: ProtoDrive Platform features a coupled motor system to mimic the vehicle drive motor and the load. The load represents the opposing forces of road gradient, friction, stop-go of traffic, etc. Given a drive cycle, the battery and super capacitor system is programmed with different control and scheduling schemes to minimize the peak power consumption and maximize the state of charge of the battery.