University of Pennsylvania
ScholarlyCommons

Departmental Papers (ESE)

Department of Electrical & Systems Engineering

September 2007

Circuits with Light at Nanoscales: Optical Nanocircuits Inspired by Metamaterials

Nader Engheta
University of Pennsylvania, engheta@seas.upenn.edu

Follow this and additional works at: http://repository.upenn.edu/ese_papers

Recommended Citation
Nader Engheta, "Circuits with Light at Nanoscales: Optical Nanocircuits Inspired by Metamaterials", . September 2007.

This is the author's version of the work. It is posted here by permission of the AAAS for personal use, not for redistribution. The definitive version was published in *SCIENCE*, Volume 317. No. 5845, pp. 1698-1702, September 2007.
Publisher URL: http://dx.doi.org/10.1126/science.1133268

This paper is posted at ScholarlyCommons. http://repository.upenn.edu/ese_papers/440
For more information, please contact repository@pobox.upenn.edu.

Circuits with Light at Nanoscales: Optical Nanocircuits Inspired by Metamaterials

Abstract
A form of optical circuitry is overviewed in which a tapestry of subwavelength nanometer-scale metamaterial structures and nanoparticles may provide a mechanism for tailoring, patterning, and manipulating local optical electric fields and electric displacement vectors in a subwavelength domain, leading to the possibility of optical information processing at the nanometer scale. By exploiting the optical properties of metamaterials, these nanoparticles may play the role of "lumped" nanocircuit elements such as nanoinductors, nanocapacitors, and nanoresistors, analogous to microelectronics. I show that this concept of metamaterial-inspired nanoelectronics ("metactronics") can bring the tools and mathematical machinery of the circuit theory into optics, may link the fields of optics, electronics, plasmonics, and metamaterials, and may provide road maps to future innovations in nanoscale optical devices, components, and more intricate nanoscale metamaterials.

Comments
This is the author's version of the work. It is posted here by permission of the AAAS for personal use, not for redistribution. The definitive version was published in *SCIENCE*, Volume 317. No. 5845, pp. 1698-1702, September 2007.
Publisher URL: http://dx.doi.org/10.1126/science.1133268

This journal article is available at ScholarlyCommons: http://repository.upenn.edu/ese_papers/440

Circuits with Light at Nanoscales:

Optical Nanocircuits Inspired by Metamaterials

Nader Engheta

University of Pennsylvania
Department of Electrical and Systems Engineering
Philadelphia, Pennsylvania 19104, U.S.A.
E-mail: engheta@ee.upenn.edu

Abstract

A form of optical circuitry is overviewed in which a tapestry of subwavelength nanometer-scale metamaterial structures and nanoparticles may provide a mechanism for tailoring, patterning, and manipulating local optical electric fields and electric displacement vectors in a subwavelength domain, leading to possibility of optical information processing at the nanometer scale. By exploiting the optical properties of metamaterials, these nanoparticles may play the role of 'lumped' nanocircuit elements, e.g., nanoinductors, nanocapacitors, and nanoresistors, analogous to microelectronics. I show that this concept of metamataerial-inspired nanoelectronics ("metactronics") can bring the tools and mathematical machinery of the circuit theory into optics, may link the fields of optics, electronics, plasmonics, and metamaterials, and may provide road maps to future innovations in nanoscale optical devices, components, and more intricate nanoscale metamaterials.

In microelectronics, the notion of a ‘circuit’ is a powerful concept in which a ‘flow’ of a certain quantity (e.g. electric current as the ‘flow’ of charges) is related to a ‘potential’ of another quantity (e.g., electric potential) through the functions of ‘lumped’ elements (e.g., resistor, inductor, capacitor, diode, etc). This ‘lumpedness’ of circuit elements is an important assumption in modeling, allowing simplification, and effectively ‘modularization’, of the function of each element. From systems point of view, in effect what is happening ‘inside’ the element becomes less relevant to the connectivity and functionality of this ‘modularized’ element to the rest of the system. This notion has been extensively and successfully used in the RF and microwave domains, and has been proven to be a powerful tool in the design, innovation, and discovery of new functionalities in circuits in those frequency domains. Extending the operating frequency to higher frequency regimes, e.g., terahertz, infrared (IR), and visible wavelengths, may in general lead to miniaturization of devices, higher storage capacities, and larger data transfer rates. Therefore, a natural question may be asked: Can this concept of lumped circuit elements, and the mathematical machinery and tools of circuit theory, be extended and applied to the optical domain? At first, one may imagine that the mere scaling down the sizes of elements from the microwave to optical wavelengths may achieve this goal. However, there are several obstacles that must be overcome before such optical lumped elements can be conceived. The first challenge is the size of such an optical module. Just as circuits in the lower frequency domains (e.g. in RF and microwave domains) indeed involve elements that are much smaller than the wavelength of operation, fabrication techniques can be used to construct nanoparticles with subwavelength dimensions at optical wavelengths. Therefore, the obstacle of size reduction may be

overcome. The second more limiting hurdle is the response of metals at infrared (IR) and optical frequencies, which cannot be simply scaled from RF to optics. Metals such as gold, silver, aluminum, and copper are highly conductive materials at RF and microwaves, and so commonly used in many circuits in these regimes. However, at optical frequencies some noble metals behave differently in that they do not exhibit conductivity in the usual sense, but instead exhibit plasmonic resonance (i.e., coupling of optical signals with collective oscillation of conduction electrons at these metal surfaces) due to the negative real part of their permittivities. Therefore, clearly at optical wavelengths the conduction current may not be the main 'current' flowing in such lumped optical elements. Instead, the other well known current term, which arises from the Maxwell equations, viz., the electric displacement current density $\frac{\partial \boldsymbol{D}}{\partial t}$, can be used as the 'flowing optical current'. Therefore, just simplistically scaling down the element size may not provide the answers to the above questions.

Lumped Optical Nanoelements

With the above issues in mind, my group took an entirely different approach to address the above questions (*1*). Imagine a highly-subwavelength-size nanoparticle made of a nonmagnetic material with permittivity ε illuminated with a monochromatic optical signal with angular frequency ω (see Fig. 1A) (*2*). After solving the Maxwell equations for the optical electric and magnetic vector fields inside and near this small particle, one can specify and evaluate the optical electric displacement current 'flowing' into and out of this particle, and because the particle is small compared with the wavelength one can also define an averaged optical electric 'potential' across this particle (*1, 2*). The ratio of these two quantities, optical potential to displacement current, can then be assigned as the

optical ‘lumped impedance’ of this nanoparticle. Such an impedance is clearly dependent on the shape and size of the particle, materials forming the particle, the optical frequency, and possibly its orientation with respect to the impressed optical electric field. It turns out that the choice of material can determine the type of lumped impedance the nanoparticle may represent (*1*): If the material is a conventional dielectric (e.g., SiO2, Si) with $\mathrm{Re}(\varepsilon) > 0$ at optical frequencies, the nanoparticle will act as a capacitive impedance (i.e., ‘nanocapacitor’); if however the particle is chosen to be of material with $\mathrm{Re}(\varepsilon) < 0$ at optical wavelengths (e.g., noble metals such as Ag, Au), the particle may behave as a negatively capacitive impedance, which implies that it will behave as an inductive impedance (i.e., ‘nanoinductor’) (*3*); and when the material exhibits some material loss, i.e., when its $\mathrm{Im}(\varepsilon) \neq 0$ (which is almost always the case), a ‘nanoresistor” element should be included in the nanocircuit representation of the nanoparticle. This behavior is consistent with the dispersion properties of dielectric functions of optical materials discussed in (*4*). Other nonlinear lumped elements, such as optical lumped ‘nanorectifier-nanodiode’ may also be envisioned when nonlinear optical materials are mixed with plasmonic nanoparticles. Before moving forward towards such optical nanocircuits, we need to expand on the analogy with conventional RF circuits. In standard RF circuits, the individual lumped elements are ‘insulated’ from each other by using non-conducting insulating materials (e.g., dielectric, air), and are connected to other elements only at their terminals using conducting wires. In short, one does not usually have to be concerned about the leakage of conduction current from the middle of the lumped elements. In the optical domain, however, the optical electric displacement current in the nanoparticles considered here can in general ‘leak’ into and out of different

parts of the nanoparticle surface. This 'current' leakage, which can lead to coupling among various tightly packed nanoelements, can be accounted for as 'dependent' sources in the circuit paradigm (*1*). To strengthen the analogy between the two paradigms of the conventional RF circuits and the optical nanocircuits envisioned here, we have proposed to use additional thin layers of materials with proper values of permittivity around the nanoparicles (*5*). For these layers to act as "insulators" for the optical displacement current, i.e., to allow negligibly small displacement current in them and thus to stop the leakage, the real part of their relative permittivities needs to be very small. Such 'epsilon-near-zero' (ENZ) materials, if designed properly, should prevent leakage of the optical electric displacement current, as inside such materials the displacement vector $\boldsymbol{D}$ should be negligibly small for a finite electric field. On the other hand, if one desires to have layers of materials that allow an easy 'flow' of displacement current without introducing noticeable optical electric field, materials with high relative real part of permittivity should be considered, as in such high-permittivity media very small electric field can produce high amount of displacement current. Such 'epsilon-very-large' (EVL) materials can play the role of nanoscale 'conduit' for the optical displacement current, analogous to the role that metallic wires play for the conduction current in the RF domains. Now let us consider a subwavelength nanoparticle that has a thin layer of an ENZ material around its sides, and thin layers of EVL materials on its two 'ends' (Fig. 1B). Such a composite nanoparticle can allow the flow of the optical displacement current in and out of its two EVL "terminals", while it confines this current within it without any leakage from its ENZ side (*5*). Depending on the permittivity of the main material in the particle, this composite nanostructure can indeed approximately act as a

‘modularized’ lumped nanoelement at optical frequencies. Thus, the addition of the ENZ and EVL materials for ‘shielding’ and ‘connecting’ the nanoparticle, although not always necessary, can provide us with closer analogy between the RF and the optical circuit concepts, and can also lead to lumped impedance values that would effectively be independent of the orientation of this nanomodule with respect to the impressed optical electric field (*5*). Before we proceed to discuss how various arrangements of such nanoparticles positioned next to one another can give us functional optical nanocircuits, we need to mention the role of metamaterials in this paradigm.

Metamaterials

Metamaterials are engineered composite media, formed by packing and embedding various subwavelength inclusions and inhomogeneities, which can exhibit unconventional response functions not observed in their individual constituents or in natural media, such as negative, low, or near-zero permittivities or permeabilities. Having both permittivity and permeability negative at a given frequency results in a negative refractive index (*6*). Metamaterials, particularly those with negative refraction, have attracted a great deal of interest in recent years (*7-26*). Following the first experimental verification of a metamaterial with negative refraction at microwave frequencies (*13*), inspired by the work of Pendry on split-ring resonators (*14*), experimental and theoretical development of this area started in the microwave regime, and has now been steadily moved into the higher frequency regime, with recent experimental breakthroughs in the THz, infrared and visible (*15-20*). It is important to emphasize that the concept of metamaterials is not just limited to only negative-index phenomenon. Indeed, other artificially engineered materials with unusual parameter

values, such as ENZ materials (*21, 22*), EVL materials (*5, 23*), and 'single-negative (SNG)' media, may offer exciting potential applications as well. For instance, using ENZ materials we have theoretically shown the possibility of squeezing light through very narrow channels and tight bends (*21*), and also its role in transparency and cloaking (*22, 25*). Broadly speaking, metamaterials provide a platform for dispersion engineering and management, namely, the possibility of developing novel materials with desired temporal and spatial dispersions, providing powerful tools in manipulating and tailoring electromagnetic waves. For instance, it is well known that by stacking pairs of thin layers of plasmonic material (e.g., Ag) and conventional dielectric one can form an anisotropic metamaterial whose permittivity tensor elements can achieve near zero or very high values (*27-29*). This suggests an example for our ENZ and EVL materials around the nanoelements.

A tapestry of nanostructures – "metananocircuits"

For our optical nanocircuit elements, we note how metamaterials, including plasmonic media play important roles in development of this concept. Using the notion of optical nanomodules described above, let us now imagine that one can position next to each other a set of these lumped nanoelements, each of highly-subwavelength size and composed of specific materials (*2*). This 'tapestry' of composite nanoparticles as optical nanomodules indeed forms a new paradigm as optical nanocircuit with subwavelength dimensions (Fig. 1C). Such a 'metananocircuit' – or 'mn-circuit', when excited by an optical signal, manifests a pattern of local optical electric and displacement vector fields that is analogous to the pattern of voltage and current distributions in a conventional RF circuit (Fig. 1C). This circuit can be excited by an optical signal through various means,

such as optical nanoantennas or optical plasmonic waveguides feeding this circuit, or direct optical illuminations. The arrangement of nanomodules can be used to tailor the local optical electric and displacement vector fields in a desired fashion in a subwavelength domain, analogously the same way as when on an RF test bench in an electronic circuit laboratory one connects different conventional circuit elements by using conducting wires on a circuit board. I argue that this patterning of local optical field can, under proper conditions, provide us with functionalities for information processing (e.g., low-pass, high-pass, band-pass filtering, etc.), analogous to what a regular circuit does in the RF domain. Let us take the case of a filter with a two-dimensional (2-D) geometry as an example (Fig. 2A). In the RF domain, a simple conventional band-pass (or a band-stop) filter can be designed using a parallel (or series) combination of an inductor (L), a capacitor (C), and a resistor (R). If we want to have an analogous filter function in our optical 'mn-circuit', we will need to use two nanomodules; one nanoparticle (or nanorod in this 2-D case) made of a material with negative permittivity (e.g., plasmonic materials such as noble metals) acting as a nanoinductor accompanied by a nanoresistor due to the material loss, and the other nanoparticle formed by a dielectric material acting as a nanocapacitor. With proper designs, juxtaposing these two nanomodules, either in a "parallel" or in a "series" fashion, may provide us with an optical mn-circuit with, respectively, the band-pass or the band-stop filtering functionality at a certain range of optical wavelengths. For the parallel case with two-dimensional (2-D) geometry (Fig. 2A), this assertion has been shown numerically using full-wave simulations of Maxwell equations, when a Drude dispersion model is assumed for the plasmonic material (e.g., Ag) forming the nanoinductor module (including material loss representing a

‘nanoresistor’) and a simple dielectric permittivity is assumed for the nanocapacitor module. This 2-D nanofilter is placed within a thin parallel-plate optical waveguide with impenetrable walls at the top and bottom (thus supporting a transverse electromagnetic (TEM) mode), acting as a two-port network. The transfer function of this filter, i.e., the ratio of the optical potential at the output port to that of the incoming potential, shows a band-pass behavior, confirming our approach to this nanofilter design at optical wavelengths (Fig. 2B). (The dispersion of the waveguide alone is excluded.) More complex nanocircuits can be envisioned when more than two nanomodules can be arranged, providing higher order transfer function for such circuits. Figure 2C left panel presents the cross section of another 2-D example containing 6 optical nanoelements in a specific layout, providing the functionality essentially analogous to that of the circuit shown in the middle panel of Fig. 2C. Here, in the right panel, we see that the full-wave 2-D simulation of a snapshot of the optical electric vector field in the cross section of this 2-D mn-circuit reveals field patterns that are analogous to voltage distributions in the circuit. Various material dispersions used in such mn-circuits can provide even richer variety of transfer functions, beyond the conventional RF counterparts. The performance and quality factors of such optical nanocircuit elements depend on the relative values of real and imaginary parts of permittivities of materials in the range of operating wavelengths, and therefore depending on specific scenarios and applications it may be preferable to utilize optical materials with proper ranges of ratios of imaginary to real parts of permittivity.

While the concept of mn-circuits is based on arrangement of metamaterial and plasmonic nanostructures, the converse may also be considered, namely, these optical

mn-circuits can be envisioned to be utilized as lumped inclusions for synthesizing metamaterials with prescribed, and even more intricate, dispersion properties. Analogous to the case of microwave metamaterials in which distributions of resonant elements (for instance either split ring (L-C) resonators in the 3-D realizations (13)) or lumped RF circuit elements (e.g., lumped inductors and capacitors) in the planar transmission line metamaterials (*10, 11*) are considered, here optical mn-circuits can be the building blocks as inclusions for more diverse classes of engineered materials in the future, providing a road map for tailoring novel optical metamaterials with various dispersion features.

Designing optical nanodevices and components

To illustrate how such mn-circuits may contribute to the understanding and innovation of other nano-optical devices and components, we have studied and analyzed several problems in which these concepts can provide guides to solutions. Here, I present a few samples. One such problem is how some of the well known antenna designs in the RF and microwave domains, e.g., the Yagi-Uda antennas can be brought into the nanoscale optical domain (*30*). In the Yagi-Uda antenna, the main element is known to be a resonant dipole, accompanied by several parasitic (i.e., passive) wire elements in order to narrow the antenna radiation patterns and point the main beam in a given direction (Fig. 3). To transplant this concept from the microwave into the optical domain, in (*30*) we considered two-material nanostructures (e.g., nanoshell particle with dielectric core and plasmonic shell (*31*)) resembling an RLC resonant circuit at optical frequencies. It is known that at a particular ratio of core-to-shell radii, this particle is at resonance (*31, 32*). Figure 3A shows this idea where several nanoshell particles, with a core of SiO2 and a shell of Ag and a certain ratio of radii, are placed at the right side of

an optical point dipole source (e.g., a quantum dot or a fluorescent molecule), while a single similar nanoshell particle but with a different ratio of radii is situated at the left side of this source (*30*). The radiation pattern of this nanoantenna, as obtained from our theoretical analysis (*30*), may indeed, under proper condition, show narrower and right-pointed main beam than that of a single dipole, as expected and anticipated from such an antenna array (Fig. 3B). So the presence of these nanoparticles in the vicinity of the optical source, e.g., a molecule, can indeed affect its emission properties. As this design is sensitive to the operating wavelength, one can envision a set of several optical Yagi-Uda nanoantennas coupled to the same molecule, but each to be designed for a different specific wavelength and each to be placed at a different orientation around a molecule. In such a scenario, each nanoantenna array, which is optimized for a specific wavelength, has its main beam pointed to a different direction. This set up will thus analyze the spectral information of the molecular emission, transforming the spectral contents into specific angular variation of emitted signals.

Another topic that has benefited inspiration from this concept of mn-circuits is the theory we developed for the far-field subdiffraction optical microscopy (FSOM), or supermicroscopy (*29*). This is a technique in which an optical imaging system in the *far field* can in principle capture the image of two points that are placed closer than half a wavelength to each other. An ordinary microscope cannot resolve such two points due to the Abbe-Rayleigh limit. However, in theory of FSOM, we have shown that using properly designed metamaterial crystals in the close vicinity of the object, one can 'magnify' these objects in the near field such that their images in the output plane of the metamaterial crystal structure can be farther apart than half a wavelength, and then a

regular optical microscope can detect these 'magnified' images. So the overall imaging system can in principle have a resolution better than the conventional Abbe-Rayleigh limit, while it is still a far-field system with a near-field magnification. The key section of such FSOM is the metamaterial layered structure in which stacks of pairs of thin plasmonic and dielectric layers create a medium with hyperbolic dispersion. The permittivity tensor of such a structure is similar to that of anisotropic plasma, which has been investigated by many groups. An interesting feature in wave propagation in such a medium is the cone of resonance (*33*). Balmain's group (*33*) has studied this phenomenon by analyzing two-dimensional arrays of lumped inductors and capacitors in the microwave frequencies. We asked what if we would replace their RF lumped inductors and capacitors with our optical lumped nanoindcutors and nanocapacitors using negative-permittivity and dielectric nanoparticles, respectively. In the limit when these nanoparticles are packed closer and closer, one would obtain the metamaterial layered structure with hyperbolic dispersion required for supermicroscopy. It is important to note that Narimanov's group, independently and at the same time but using a quite different approach, studied such metamaterial structures for supermicroscopy, which they name 'hyperlens' (*34*). Zhang's group (*35*) and Smolyaninov's group (*36*) have experimentally verified and validated this concept.

One more topic that got inspiration from the notion of mn-circuits is the possibility of design of 1D, 2D, and 3D optical nanotransmission lines with negative refraction (*26, 37, 38*). In the RF and microwave domains, it has been shown by several groups (*10, 11*) that dual transmission lines, formed by series lumped inductors and shunt lumped capacitors, support wave propagation with negative refraction. When one

replaces these lumped elements with their optical counterparts (shown in Fig, 1A), optical nanotranmission lines can be envisioned in which a subset of the allowed modes of propagation may exhibit negative refraction. Figure 4 sketches this concept. This approach provides an interesting way to obtain negative refraction at optical frequencies. Atwater's group has recently demonstrated experimentally the negative refraction in 2-D metal-insulator-metal geometry (*39*). The circuit concept has also facilitated the understanding and calculation of resonant metamaterials at optical frequencies in (*40*). Moreover, the concept of mn-circuits has helped to suggest the arrangements of rings of metallic nanoparticles, as circular loops of LC elements in optics, i.e., the optical version of slit-ring resonators, which can generate magnetic dipole moments at optical frequencies (*41*). Such rings of nanoparticles can be the basic inclusions for photonic metamaterials with magnetic response and negative refraction (*41*).

Concluding Remarks

While mn-circuits may offer exciting possibilities, and may suggest new ways of tackling nanooptical data processing, they also bring new challenges and questions to address. As the few examples described above suggest this notion may bring a different method in exploring some of the future potentials in nanooptics. This concept may link together the fields of circuit designs and nanooptics, along with metamaterials and plasmonics, linking the 'macroworld' to the 'nanoworld' in optics and electronics, and leading to another paradigm for nanoelectronics/nanophotonics ("metactronics"). It can open doors to the exporting and transplanting various ideas from RF and microwave into the IR and visible frequency domains, and it may lead to innovation in nanodevices and components, with capability of optical detection, optical processing and storage, and data

exchange on the nanoscale, with potential applications and breakthroughs in various scientific fields.

References and Notes

1. N. Engheta, A. Salandrino, A. Alù, *Phys. Rev. Lett*., **95**, 095504 (2005)
2. Although the nanoparticles are assumed to be highly subwavelength, they are not *too* small to necessitate taking into account the quantum effects in these phenomena. Therefore, we are still operating in the domain of classical electrodynamics, and permittivity functions are considered.
3. Depending on the frequency dispersion of the dielectric function, such an effective nanoinductor may itself be frequency dependent as $L_{eff} \propto \frac{1}{-\omega^2 a \operatorname{Re}(\varepsilon(\omega))}$, where a is length scale related to the size of particle. If we consider a Drude model for $\varepsilon = \varepsilon_o \left(1 - \frac{\omega_p^2}{\omega^2}\right)$ and if we operate at frequency ω sufficiently lower than ω_p, then L_{eff} will be approximately constant. If we are close to, but still lower than, ω_p, this nanoparticle can be regarded as a parallel combination of a capacitor and an inductor, with inductive impedance still dominating the effect. I thank Professor Sergei Tretyakov of Helsinki University of Technology for his comments on this latter issue and the related fruitful discussion.
4. V. M. Shalaev, *Physics Reports*, **272**, 61 (1996).
5. M. Silveirinha, A. Alù, J. Li, N. Engheta, http://www.arxiv.org/abs/cond-mat/0703600.
6. V. G. Veselago, *Soviet Physics Uspekhi*, **10**, 509 (1968).
7. D. R. Smith, J. B. Pendry, M. C. K. Wiltshire, *Science*, **305**, 788 (2004).
8. J. B. Pendry, D. R. Smith, *Scientific American*, **295**, 60, July 2006.
9. V. M. Shalaev, *Nature Photonics*, **1**, 41 (2007).
10. C. Caloz, T. Itoh, *Electromagnetic Metamaterials – Transmission Line Theory and Microwave Applications*, Wiley-IEEE Press (2006).
11. G. V. Eleftheriades, K. G. Balmain, (editors), *Negative-Refraction Metamaterials*, Wiley-IEEE Press (2005).
12. N. Engheta, R. W. Ziolkowski, (editors), *Metamaterials – Physics and Engineering Explorations*, Wiley-IEEE Press (2006).
13. R. Shelby, D. R. Smith, S. Schultz, *Science*, **292**, 77 (2001).
14. J. B. Pendry, A. J. Holden, D. J. Robbins, W. J. Stewart, *IEEE Trans. Microwave Theory Tech*. **47**, 2075 (1999).
15. T. J. Yen, *et al.*, *Science* **303**, 1494 (2004).
16. V. M. Shalaev, *et al.*, *Opt. Lett*., **30**, 3356 (2005).
17. S. Zhang, *et al.*, *Phys. Rev. Lett*. **95**, 137404 (2005).
18. S. Zhang, *et al.*, *J. Opt. Soc. Am. B*. **23**, 434 (2006).
19. G. Dolling, C. Enkrich, M. Wegener, C. Soukoulis, S. Linden, *Opt. Lett*. **31**, 1800 (2006).
20. G. Dolling, M. Wegener, C. Soukoulis, S. Linden, *Opt. Lett*., **32**, 53 (2007).
21. M. Silveirinha, N. Engheta, *Phys. Rev. Lett*. **97**, 154703 (2006).
22. A. Alù, N. Engheta, *Phys. Rev. E*. **72**, 016623 (2005).
23. J. T. Shen, P. B. Catrysse, S. Fan, *Phys. Rev. Lett*. **94**, 197401 (2005).
24. J. Li, N. Engheta, *Phys. Rev. B*. **74**, 115125 (2006).
25. M. Silveirinha, A. Alù, N. Engheta, Phys. Rev. E. **75**, 036603 (2007).
26. A. Alù, N. Engheta, *Phys. Rev. B*., **74**, 205436 (2006).
27. S. Anantha Ramakrishna, J. B. Pendry, M. C. K. Wiltshire, W. J. Stewart, *J. Mod. Opt*. **50**, 1419 (2003).
28. D. Schurig, D. R. Smith, *New J. Phys*. **7**, 162 (2005).
29. A. Salandrino, N. Engheta, *Phys. Rev. B*. **74**, 075103 (2006).
30. J. Li, A. Salandrino, N. Engheta, http://www.arxiv.org/abs/cond-mat/0703086
31. E. Prodan, C. Radloff, N. J. Halas, P. Nordlander, *Science* **302**, 419, (2003).
32. A. Alù, N. Engheta, *J. Appl. Phys*. **97**, 094310 (2005).

33. K. G. Balmain, A. A. E. Luttgen, P. C. Kremer, *IEEE Antennas Wireless Propag. Lett*. **1**, 146 (2002).
34. Z. Jacob, L. V. Alekseyev, E. Narimanov, *Opt. Express*, **14**, 8247 (2006).
35. Z. Liu, H. Lee, Y. Xiong, C. Sun, X. Zhang, *Science* **315**, 1686 (2007).
36. I. I. Smolyaninov, Y. J. Hung, C. C. Davis, *Science* **315**, 1699 (2007).
37. A. Alù, N. Engheta, *J. Opt. Soc. Am. B*, **23**, 571 (2006).
38. A. Alù, N. Engheta, *Phys. Rev. B.* **75**, 024304 (2007)
39 H. J. Lezec, J. A. Dionne, H. A. Atwater, *Science*, **316**, 430 (2007)
40 T. P. Meyrath, T. Zentgraf, H. Giessen, *Phys. Rev. B.*, **75**, 205102 (2007)
41 A. Alu, A. Salandrino, N. Engheta, *Optics Express*, **14**, 1557 (2006)
42. I thank all the members of my research group, particularly Andrea Alù and Jingjing Li, for their efforts in preparing parts of Figs. 2A-C, Figs. 3A-B, and Fig. 4B, for many fruitful discussions, and for their contributions to various aspects of the metamaterial and plasmonic research in my group. I acknowledge the research support from the U.S. Air Force Office of Scientific Research (AFOSR) grant number FA9550-05-1-0442.

Figures Captions:

Figure 1. Subwavelength nanoparticles as 'lumped' nanocircuit elements at optical frequencies, and the collections of such nanoparticles. (A) A nanoparticle, with subwavelength size, when illuminated by a monochromatic optical signal, can effectively play the role of a 'lumped' optical circuit element depending on the permittivity of its material (*2*): (B) An optical nanomodule, formed by a material nanoparticle with subwavelength size, covered on its sides by layers of material with very low real part of relative permittivity, and on its two 'ends' by layers of material with very high real part of relative permittivity. This may perform as an 'insulated' lumped optical nanoelement with two 'connecting terminals". (C) Notion of 'metananocircuit', or 'mn-circuits', several lumped optical nanomodules of (B), arranged next to each other, with a subwavelength dimension. When this mn-circuit is excited by an optical signal, the optical electric fields and displacement currents in these elements are tailored and

patterned such that this collection of particles may approximately behave as the circuit shown on the right in a specific frequency band.

Figure 2. Designed functionality: an example of filtering properties of optical mn-circuits. (A) RF circuit on the left shows a standard band-pass RLC filter, while the mn-circuit on the right shows the cross section of two-dimensional (2-D) optical counterpart of such nanofilters, formed by juxtaposing two nanorods; one of Si_3N_4 with permittivity of about $4.33\varepsilon_o$, and the other made of Ag with a Drude model dispersion consistent with the silver permittivity data from the literature. The inset shows the zoomed-in 2-D full-wave numerical simulation of optical electric field vectors, when a 421-nm-wavelength optical signal guided in this waveguide impinges on these two nanorods. (B) Amplitude and phase of the transfer function of the 2-D nanofilter shown in (A). In each plot, the two curves – one representing the full-wave 2-D simulation of the nanorod collection (black) and the other the result of the lumped circuit theory (red), are shown. The good agreement between the two curves supports the notion that the two nanorods indeed effectively act as lumped elements. (C) Cross section of a more complex 2-D mn-circuit formed by 6 nanoelements (3 nanoindcutors and 3 nanocapacitors) is sketched in the left (color codes are given in Fig. 1 C), representing the circuit shown in the middle panel. A snapshot of optical electric field distribution in this cross section when the mn-circuit is excited by a plane wave from the left, is obtained using the full-wave 2-D numerical simulation, and shown in the right.

Figure 3. Metananocircuit as a tool in design of optical Yagi-Uda nanoantennas (*30*). (A) A sketch of conventional Yagi-Uda RF antenna is shown above. The collection of nanoshell particles (with two different ratios of radii) around an optical point dipole

source (e.g., a molecule) can form an Yagi-Uda-type optical nanoarrays. (B) From (*30*). The theoretically-evaluated radiation patterns of the optical Yagi-Uda-like nanoarrays in (A) at 620 nm (red), compared with that of a dipole alone (black). In (*30*), we used the core of SiO2 and the shell of Ag in our analysis, with outer radius of $0.1\lambda_o$ and ratios of radii of 0.851 and 0.834 for the left and right nanoshells, respectively. The distance between the left nanoshell and the source is $0.25\lambda_o$, while that on the right (and between the right particles) is $0.65\lambda_o$.

Figure 4. Optical nanotranmission line based on the mn-circuits. (A) The concept of transmission lines in RF and microwave (left panel) can be brought into the optical domain using the notion of lumped nanocircuit elements (middle and right panel). By replacing the lumped inductor and capacitor with plasmonic ($\mathrm{Re}(\varepsilon) < 0$) and dielectric ($\mathrm{Re}(\varepsilon) > 0$) nanoparticles, respectively, the structures shown in the middle panel can be obtained. In the limit, when these nanoparticles merge into each other, the guided-wave structures sketched in the right are resulted. These structures thus indeed function as optical nanotransmission (*37*). (B) Adapted from (*37*). The dispersion diagram of the waveguide shown in (A), when the SiO2 and Ag are considered for the dielectric and plasmonic materials. Solid lines are for the even mode in Ag-SiO2-Ag waveguide; dashed lines are for the odd mode in SiO2-Ag-SiO2 waveguide. Dotted line shows the light line for SiO2. For Ag, a Drude dispersion is assumed in our analysis. These results show that such optical nanotransmission lines can exhibit backward-wave and forward-wave propagation, as their RF and microwave counterparts do. Copyright (c) 2006, Optical Society of America (OSA). (C) Adapted from (*41*). Simulated electric field distribution for a nanoring composed of four plasmonic nanospheres at 655 THz. Copyright (c) 2006, Optical Society of America (OSA).

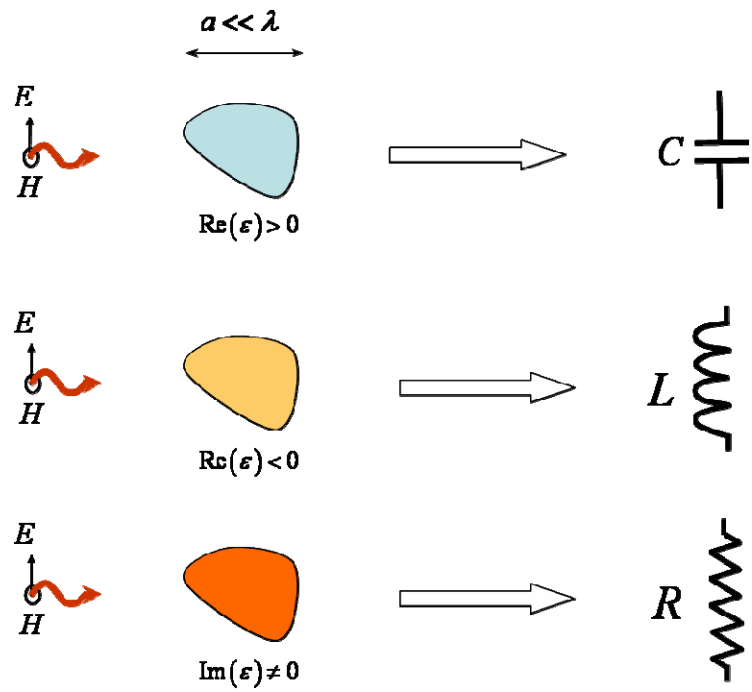

(A)

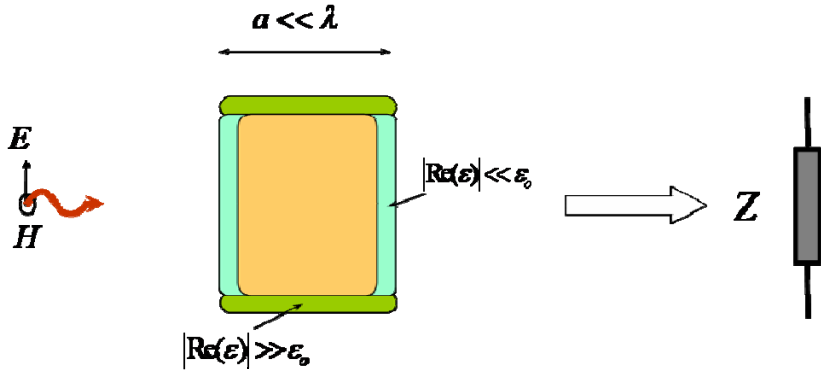

(B)

Figure 1

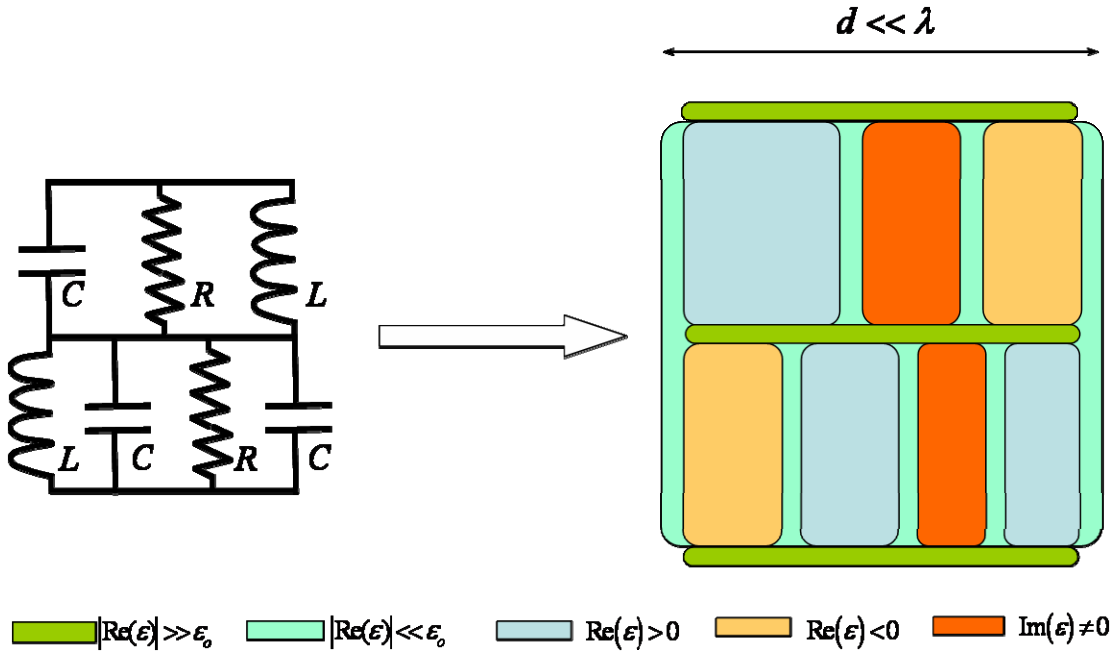

(C)

Figure 1

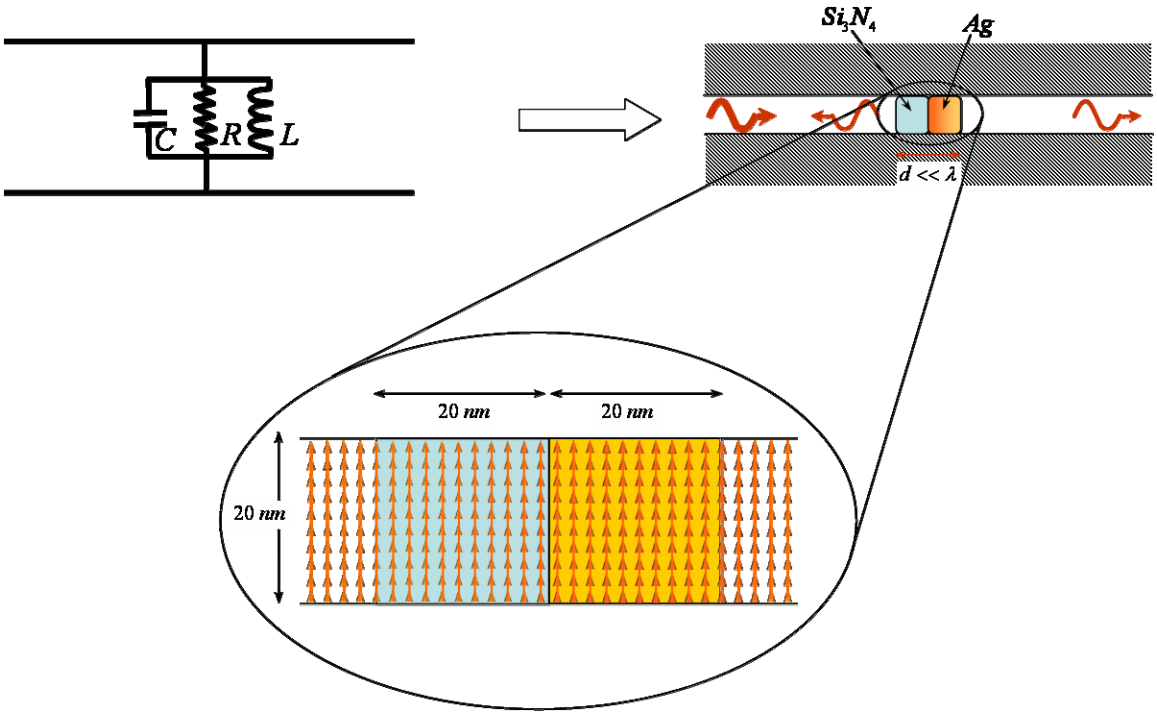
C
R
L
Si_3N_4
Ag
d << λ
20 nm
20 nm
20 nm

(A)

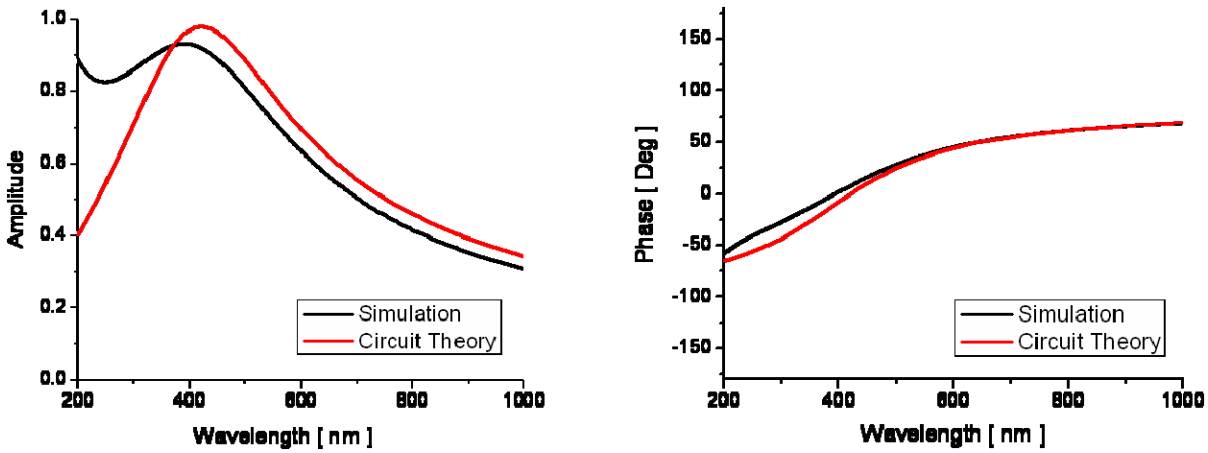
Amplitude
Wavelength [nm]
Simulation
Circuit Theory
Phase [Deg]
Wavelength [nm]
Simulation
Circuit Theory

(B)

Figure 2

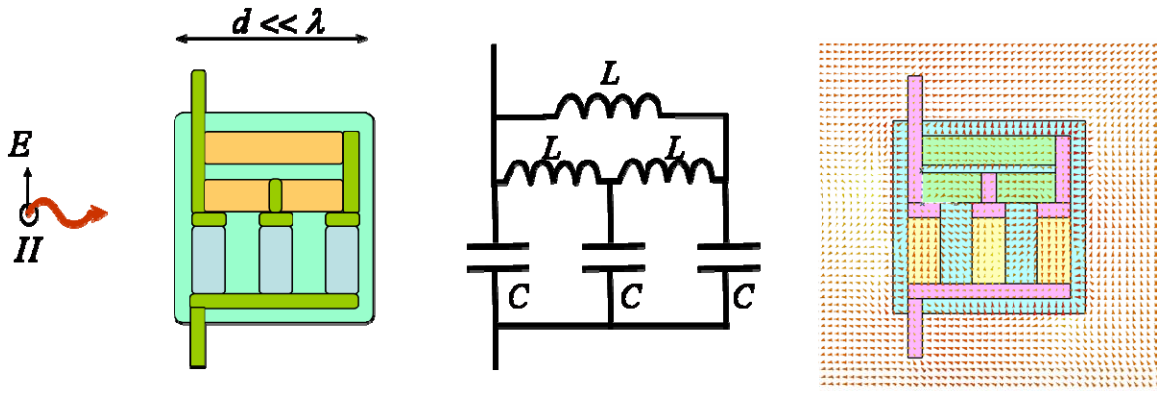

(C)

Figure 2

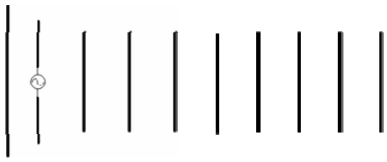

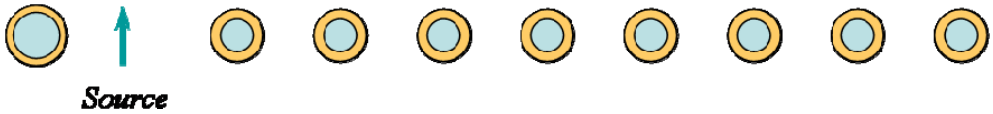

(A)

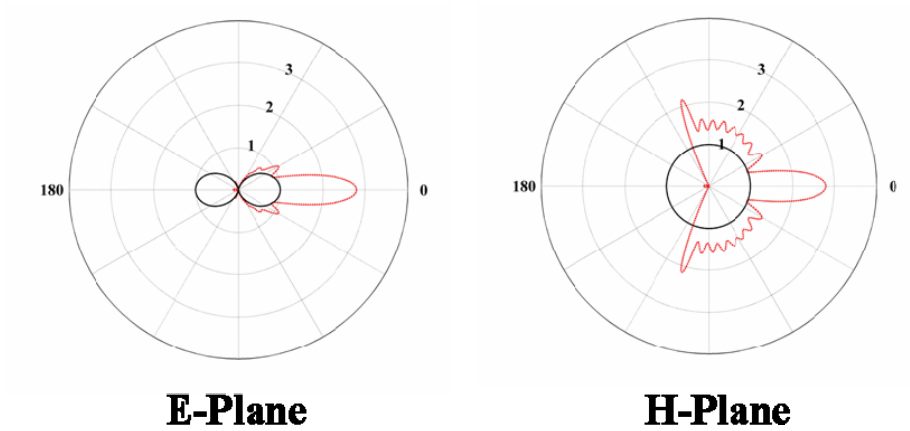

(B)

Figure 3

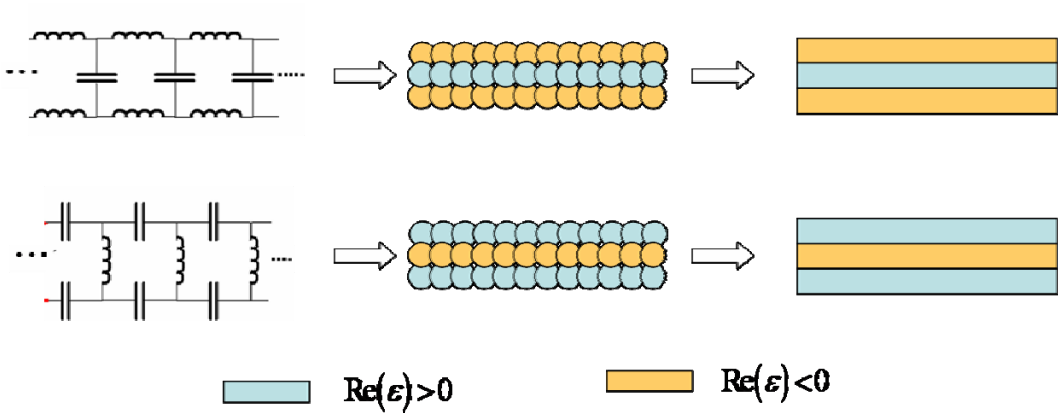

(A)

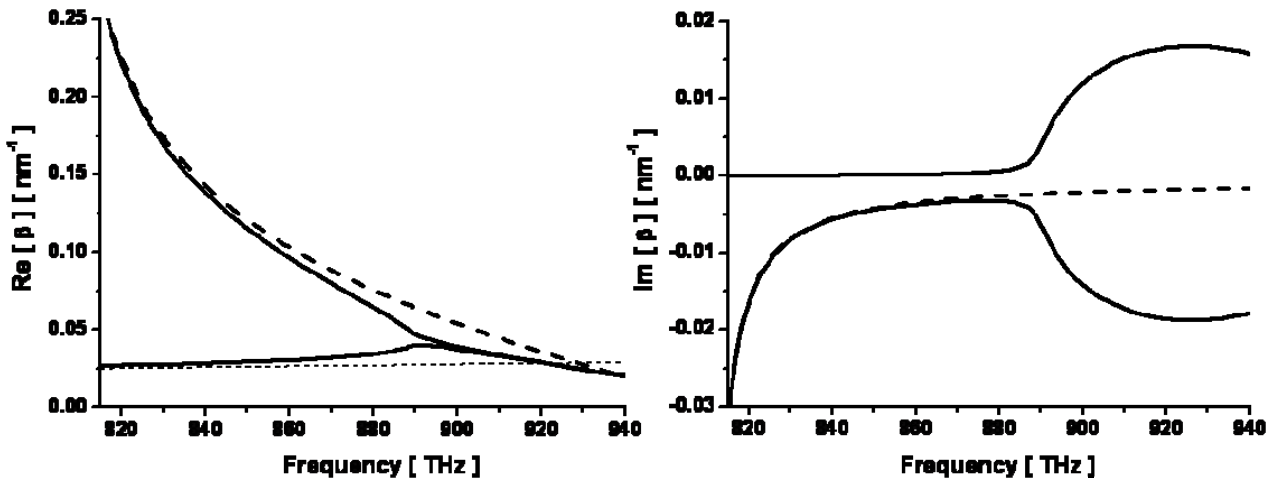

(B)

Figure 4

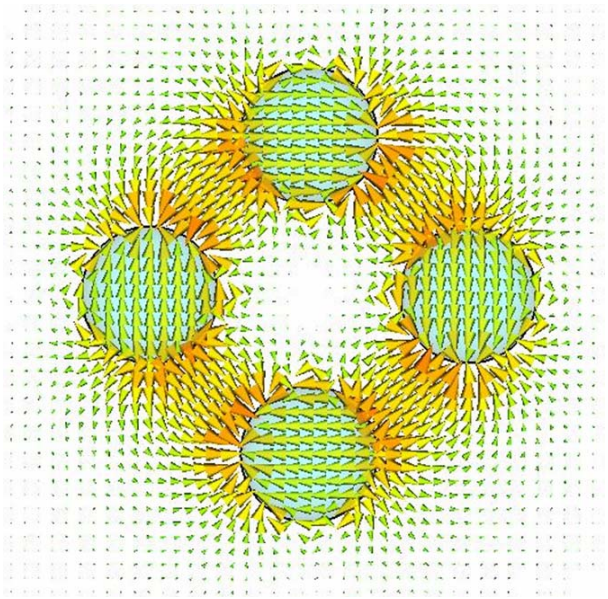

(C)

Figure 4