University of Pennsylvania
ScholarlyCommons

Departmental Papers (BE) Department of Bioengineering

8-1-2002

Herman P. Schwan: A Scientist and Pioneer in Biomedical Engineering

Kenneth R. Foster
University of Pennsylvania, kfoster@seas.upenn.edu

Copyright 2002 Annual Reviews. Reprinted from *Annual Review of Biomedical Engineering*, Volume 4, August 2002, pages 1-27.
Publisher URL: http://dx.doi.org/10.1146/annurev.bioeng.4.092001.093625

This paper is posted at ScholarlyCommons. http://repository.upenn.edu/be_papers/52
For more information, please contact repository@pobox.upenn.edu.

Annu. Rev. Biomed. Eng. 2002.4:1-27. Downloaded from arjournals.annualreviews.org
by UNIVERSITY OF PENNSYLVANIA LIBRARY on 02/14/05. For personal use only.

Herman P. Schwan

Annu. Rev. Biomed. Eng. 2002. 4:1–27
doi: 10.1146/annurev.bioeng.4.092001.093625
Copyright © 2002 by Annual Reviews. All rights reserved

HERMAN P. SCHWAN: A Scientist and Pioneer in Biomedical Engineering

Kenneth R. Foster
Department of Bioengineering, University of Pennsylvania, Philadelphia, Pennsylvania 19104; e-mail: kfoster@seas.upenn.edu

Annu. Rev. Biomed. Eng. 2002.4:1-27. Downloaded from arjournals.annualreviews.org
by UNIVERSITY OF PENNSYLVANIA LIBRARY on 02/14/05. For personal use only.

Key Words dielectric properties of tissues, biological effects of electromagnetic fields, biomedical engineering, ultrasound in medicine

CONTENTS

BEGINNINGS . . . 1
Early Years . . . 1
War Years . . . 4
In Philadelphia . . . 6
INTELLECTUAL ROOTS . . . 7
Early Studies on Effects of Electricity on Biological Systems . . . 7
Early Influences . . . 7
SCIENTIFIC CONTRIBUTIONS . . . 9
Dielectric Properties of Tissues and Biological Materials . . . 9
Biophysics of Ultrasound . . . 15
Interaction of Electromagnetic Fields with Biological Systems . . . 16
SCHWAN AND THE EMERGENCE OF THE PROFESSION OF BIOENGINEERING . . . 20
Early Organizations in Biomedical Engineering . . . 22
National Institutes of Health and the Emergence of Bioengineering . . . 23
Emergence of Bioengineering at the University of Pennsylvania . . . 24
Post Retirement Years . . . 24

BEGINNINGS[1]

Early Years

Herman Paul Schwan was born on August 7, 1915, in Aachen, Germany, the son of Wilhelm, a mathematics and physics teacher, and Meta (née Pattberg). His

[1]Based on unpublished autobiographical notes prepared by H.P. Schwan in the late 1990s. See also (1).

childhood was marked by frequent moves: to Bad Kreuznach (a spa town not far from Frankfurt), Remscheid, Duesseldorf, Meseritz (now in Poland), and Göttingen.

These moves were the result of frequent transfers of his father, a gymnasium (high school) mathematics teacher. An outspoken liberal—at a time when many Germans blamed the loss of the war on leftist agitation—the elder Schwan frequently got into arguments with local powers that be over issues such as nationalists' demands for a return of the old Kaiser regime and the abolition of the Versailles Treaty. Wilhelm was a gifted mathematician and author of a well-received textbook on geometry (2) [and even in 1981 was the subject of a commemorative article (3)], who had been considered for a professorship in Darmstadt. Stymied in his career by political problems, he became embittered and emotionally unstable, estranged from his son and separated from his wife.

Recognizing their son's academic abilities, his mother (who had by then separated from his father) followed the father's advice and moved to Göttingen to allow Schwan to attend the excellent gymnasium in that famous university town. Other students within a year or so of Schwan's class included the children of Windaus (Nobel Prize in Chemistry), the famous mathematician Courant, Born (Nobel Prize in Physics), and the famous relativity theorist Hermann Weyl. Despite living in near-poverty, Schwan excelled in physics and mathematics and graduated from the gymnasium with excellence in 1934.

This idyll soon ended. In January 1933, Hitler became chancellor of Germany and the Nazis seized power. The Nazis declared Schwan to be politically immature (Schwan thought it was because he had voiced his anti-Nazi opinions in classroom discussions), which prevented his admission to a university.

In an effort to rehabilitate himself, Schwan volunteered for the German "Arbeitsdienst" (a "voluntary" working service organization, principally used to rehabilitate criminals and political opponents), and began six months of physical labor and political and military training under grueling conditions. He soon developed heart problems and was released from the program. Nevertheless, his willingness to serve in the Arbeitsdienst was enough to persuade the Nazis to declare him "matured." In the same year (1934), the Nazis forced his father to retire at age 47 after which he subsisted on a meager pension. Schwan's financial support dwindled still further.

Schwan's political views were known to the Nazi student organization in Göttingen, and he viewed his prospects for obtaining a tuition waiver in Göttingen as dim. He obtained a tuition scholarship at the University of Frankfurt and, as required by the scholarship, moved into a Kameradschaftshaus (comradeship house), a student hostel run under near-military conditions and dominated by the Nazis. Much later he described his experience there:

> I soon became known in the comradeship house as the "Judenjüngling" (Jew youth) a derogatory term indicating a young man making up to the Jews. One of the leaders was a brown shirt from Austria. He told me that they kept track of me and were well aware of my academic standing. He sadly shook his head

Annu. Rev. Biomed. Eng. 2002.4:1-27. Downloaded from arjournals.annualreviews.org
by UNIVERSITY OF PENNSYLVANIA LIBRARY on 02/14/05. For personal use only.

> saying something like: "What a shame to be so decadent. But don't worry we need you for some time and you will work for us. When the glorious war to come has been victorious we shall have to eliminate you." Later I was beaten up at nighttime. Some sort of large towel or sack had been wrapped around me rapidly while I was deep asleep and then they beat me with sticks I presume. It was an absolutely nightmarish experience. Next morning I felt rather ill and was told to consult a doctor. He concluded that my heart was damaged. I left the comradeship house at once and for good. But I had to pay full tuition in the spring term even though I continued to pass exams with A.

Annu. Rev. Biomed. Eng. 2002.4:1-27. Downloaded from arjournals.annualreviews.org
by UNIVERSITY OF PENNSYLVANIA LIBRARY on 02/14/05. For personal use only.

Schwan returned to Göttingen to study mathematics, but dropped out after two semesters for financial reasons. He moved to Berlin and took a job in the sales division of Siemens & Halske, then left in the fall of 1936 to take courses in mathematics and theoretical physics in Breslau (now the Polish city of Wroclaw). He soon returned to Göttingen because his father had developed psychiatric problems. Totally broke, depressed, and learning that he was under investigation by the Nazis for meetings with "foreign elements," Schwan temporarily shelved his plans for further studies towards a doctoral degree. In March 1937, he took a job with Telefunken in Berlin, where he was put to work testing and evaluating radio receivers.

At Telefunken, Schwan met a former instructor in Frankfurt, a former assistant professor of physics. One thing led to another, and Schwan came to the attention of Boris Rajewsky (1893–1974), a famous Russian biophysicist who had recently been appointed head of the Oswalt Institute for Physics in Medicine at the University of Frankfurt (the former head having been dismissed and imprisoned by the Nazis). Rajewsky offered Schwan a job as a technician, and agreed to provide time to continue his studies and pay his tuition.

Schwan took leave from Telefunken. After a short visit to Paris in search of a job outside of Germany (where he found prospects very slim), he moved to Frankfurt to begin work with Rajewsky in October 1937. Schwan maintained ties with Telefunken and took a summer job (1938) with the firm in its decimeter-wave laboratory where he learned experimental techniques in microwave engineering.

Rajewsky's scientific reputation concerned biological effects of ionizing radiation. In Frankfurt, he developed a research program on biological effects and therapeutic uses of radiofrequency (RF) energy. Schwan was put to work improving the primitive equipment then available to measure the dielectric properties of tissues, and he eventually developed a variety of impedance bridges and measurement techniques for measurements over a wide frequency range. He collected much of the data that was assembled in a volume edited by Rajewsky (4).

Schwan found the intellectual environment in Frankfurt less stimulating than in Göttingen. However, work in Rajewsky's laboratory had important benefits. As a member of the Nazi party (Schwan thought that Rajewsky had joined to further his career, rather than from political conviction), Rajewsky could shield Schwan from political difficulties. Perhaps more importantly, he could keep Schwan out of the draft, which became an urgent issue for Schwan as the war loomed ahead.

War Years

Rajewsky kept the laboratory functioning until late in the war, and its work focused on basic medical and biophysical studies. For his thesis topic, Rajewsky assigned Schwan to investigate the high frequency dielectric properties of tissue. Towards this end, Schwan developed instrumentation and measured the dielectric properties of blood, using dielectric mixture theory to interpret the results. He earned his Ph.D. in biophysics at the University of Frankfurt in 1940 with distinction, and published several papers on the dielectric properties of tissues during the war years.

Schwan obtained equipment for microwave measurements using transmission lines, developed techniques for precision dielectric permittivity and loss measurements, and conducted measurements on lossy materials. After the war, Schwan also measured the dielectric properties of tissues at Gigahertz frequencies. This work led to his second doctorate, the Dr. habil., in 1946.

Schwan was not completely shielded from war research, however. He was assigned to help develop nonreflecting (to radar) materials for conning towers of submarines, to reduce their vulnerability to Allied air attacks. Through a colleague, Schwan informed the Allies of this work. He later remarked: "I know that such action may be considered treacherous. However Nuremberg's verdict against conforming Nazis clearly established the responsibility for disobedience against an inhuman regime and I continue to share this point of view." After his colleague's arrest a few months later, Schwan purchased a gun and slept with it under his bed for several months afterwards.

Schwan had a close brush with military service after the collapse of the Stalingrad campaign (January 1943), which led to a major Russian offensive near Kursk the following summer. He received orders to report for emergency training and probable deployment to what was to become the battle of Kursk (July 1943). Rajewsky managed to keep him out of the service, which (because the Germans had a reported 100,000 casualties in the battle) might well have saved his life.

By 1942, the Allies were conducting extensive air raid attacks on German cities, and Frankfurt was naturally a prime target. As Schwan recalled:

> In March 1944, the city was hit four times in succession concentrating on the east end first, two days later on the large center city, and again two days later once more. It is difficult to judge what attack did most of the damage. . . . The house next to mine had been blown apart and was entirely collapsed. . . . The institute was also hit and the third level, where my laboratories had been, burned out. The entire roof was gone . . .
>
> After the March series of raids, Frankfurt was a big ruin field and eerily quiet. Some thousand people had been killed and most of the survivors left the city for good, including my mother and most of the institute staff. A second institute had been set up in a small village about 20 miles away for safety purposes and a good part of the institute activity transferred.
>
> The next devastating air raid took place about six months later and concentrated on the west end where I lived. . . . An addition to the institute building had

Annu. Rev. Biomed. Eng. 2002.4:1-27. Downloaded from arjournals.annualreviews.org
by UNIVERSITY OF PENNSYLVANIA LIBRARY on 02/14/05. For personal use only.

Annu. Rev. Biomed. Eng. 2002.4:1-27. Downloaded from arjournals.annualreviews.org
by UNIVERSITY OF PENNSYLVANIA LIBRARY on 02/14/05. For personal use only.

> been erected, destined to house a 3-million-volt generator. This building may have evoked the special attention of Allied air survey since there was much concern that the Germans might develop an atomic weapon and Rajewsky's expertise in radioactivity was probably well-known. A small sized air operation took place, which appeared to concentrate on the institute, but missed. During the fall and winter of 1944–1945, air raids resumed. . . . The "new" building was hit by an explosive bomb. I was at the time in Berlin . . .

Rajewsky and most of the members of the institute had left Frankfurt; Schwan stayed behind. In March 1945, American armies entered Frankfurt:

> On March 15, 1945, I was once again having a meeting in Hoechst discussing data that I had measured. The Frankfurt institute was by now deserted and I was the last to stay even though most of my equipment had been transported into the country side to a small village Dacha serving as the last escape place for the institute. . . . [We] learned that Patton had crossed the Rhine. . . . [The Nazi governor] ordered all people at once to leave the city by bicycle or foot. . . . I did not follow their order. . . . We left our apartment about one or two hours after the speech and crossed the river to establish residence on the institute grounds. . . . During the next two days little happened. . . . Then, after two days, a number of soldiers entered our underground bunker looking for someone who could speak some English. The few other institute members there pointed at me and so I took the soldiers through the entire large institute, room for room [looking for German soldiers]. . . . Two of them told me that they had been students when they were drafted. They appeared to have some respect for science and put me at ease by their friendliness.

Beginning the process of denazification, the Allied military authorities required all Germans to list their affiliations. Germans who had belonged to Nazi-related organizations (the majority of citizens) were declared "concerned" and lost their jobs pending their appearance before a denazification court. Rajewsky, as a former Nazi party member, had to give up his position as director of the institute until his appearance before the court in 1947. Schwan was declared "not concerned" and was appointed acting director of the institute, which was soon renamed the Max Planck Institute of Biophysics. He served in this capacity until his departure for the United States in 1947.

As acting director of the Institute, Schwan was kept busy providing for physical security of the institute, borrowing money from a local bank to pay salaries, putting returning members of the Insitute to work repairing equipment, and other urgent matters.

In early 1946, Schwan finally began to write his second doctoral thesis (for the Dr. habil.) that summarized the theoretical work that he had done in previous years on the determination of the electrical properties of lossy materials at decimeter wavelengths. He submitted the thesis near the end of the year and obtained the *venia lengendi*, i.e., the privilege to teach at the university. Schwan was finally on his way towards a university career.

Shortly after the war had ended, teams of American experts began to visit United States–occupied areas of Germany, as part of an American program to recruit outstanding German scientists.

> One of the expert visitors was a biophysicist, Dr. David Goldman (a Navy Lieutenant and then a member of the U.S. Naval Medical Research Institute in Bethesda, Maryland). He had obtained his doctorate under Kenneth Cole, the eminent scientist who contributed so much and so significantly to the understanding of the electrical properties of biological cells and how nerves work. He was particularly interested in my work related to these topics. Some months later, a lieutenant came offering a contract with the Navy. It was a most generous offer: six months work in the U.S.A., my German salary doubled and deposited in a German bank of my choosing, leave of absence from my teaching duties at the university, a per diem compensation in the U.S.A. of $6, free transportation to and from the U.S.A., free lodging in the U.S.A. in junior officers quarters, and free food in officers dining facilities. This was outstanding and gave me a chance to catch up with science after a long isolation from international science. I accepted readily and prepared to leave in August 1947.

In Philadelphia

Schwan was established in a laboratory at the Aeromedical Equipment Laboratory of the U.S. Naval Base in Philadelphia. He joined the University of Pennsylvania in 1950, where he spent the rest of his career.

At the University of Pennsylvania, Schwan held a succession of faculty appointments. His initial appointments were in the Medical School (principally in the Department of Physical Medicine and Rehabilitation and a secondary appointment in the Department of Medicine), working with physicians on problems related to physical medicine and tissue properties in situ. In 1952, he received an additional faculty appointment in the Moore School of Electrical Engineering at Penn, and was appointed Head of its Electromedical Division. In 1961, he became Chairman of the Graduate Group on Biomedical Electronic Engineering, thus establishing one of the first graduate programs in this field. He retired as Alfred Fitler Moore Professor Emeritus in 1983.

Schwan received many honors during his career. These included fellowship in the Institute of Electrical and Electronic Engineers (IEEE) and the American Association for Advancement of Science (AAAS), election to the National Academy of Engineering, and election as foreign member to the Max Planck Institute for Biophysics. He received several honorary doctorates (University of Pennsylvania, 1986; University of Kuopio, Finland, 2000; and University of Graz, 2001). He was awarded the Boris Rajewsky Prize for Biophysics (1974), the IEEE Edison Medal (1983), the AIEE Kendall Award (1983), IEEE Centennial Medal (1984), and the d'Arsonval Award of the Bioelectromagnetics Society (1985), as well as the first Otto H. Schmitt Award of the International Federation for Medical and Biological Engineering (2000). He is an honorary member of the German Biophysical Society.

Annu. Rev. Biomed. Eng. 2002.4:1-27. Downloaded from arjournals.annualreviews.org
by UNIVERSITY OF PENNSYLVANIA LIBRARY on 02/14/05. For personal use only.

Schwan established his family in the Philadelphia suburb of Radnor, where he continues to live. His first marriage, during difficult wartime conditions in Germany, ended in divorce shortly after he moved to the United States. He married Anne M. Del Borrello in 1949. His children are Barbara (born in 1950), Margaret (1954), Stephen (1960), and twin daughters Catherine and Carolyn (1961). Two of his children have careers related to science and mathematics (computer systems and mathematics education); his other children have developed interests in other fields.

INTELLECTUAL ROOTS

Annu. Rev. Biomed. Eng. 2002.4:1-27. Downloaded from arjournals.annualreviews.org
by UNIVERSITY OF PENNSYLVANIA LIBRARY on 02/14/05. For personal use only.

Early Studies on Effects of Electricity on Biological Systems

The use of electric and magnetic fields (not necessarily recognized as such) in medicine goes back to classical times and has continued to modern times. One history (5) cites 923 dissertations and books on the subject, most written in the nineteenth century.

As electrical technology improved in the nineteenth century, prominent physicists, physiologists, and engineers (including Wien, Nernst, and Tesla) studied the electrical properties of tissues at low frequencies, and developed theories to explain biological phenomena such as nerve excitation and the frequency dependence of the excitation threshold.

Other investigators studied the bulk electric properties of tissue and cell suspensions, motivated by a combination of practical and basic scientific concerns. For example, Stewart measured the low frequency resistance of blood while developing indicator dilution measurements of blood flow. Around 1911, Höber examined the frequency dependence of the resistivity of blood including high frequencies, showing that it decreased with frequency and estimating the resistivity of the interior of the erythrocyte. This work was among the first to provide direct experimental support for Bernstein's hypothesis (1902) that cells are surrounded by a membrane.

After World War I, laboratories began to emerge in which physicists, engineers, and physicians began to collaborate on the use of high frequency technology to solve medical problems. One important application was in diathermy equipment. During the 1920s, a group at the General Electric Company's corporate laboratories in Schenectady, New York, developed equipment for radiofrequency diathermy (6), and Siemens maintained a biophysical laboratory in Erlangen—two of the first bioengineering laboratories in industry. This period also saw the establishment of biophysical laboratories specifically organized to apply sophisticated physical concepts to the study and analysis of biological phenomena. The Kaiser Wilhelm Institute of Biophysics, where Schwan began his scientific career under Rajewsky and later headed, was a premier example.

Early Influences

In an essay in 2001, Schwan listed several biophysicists who most strongly influenced his work (7). These included:

- R. Höber, whose 1911 study on the impedance of blood is cited above. Höber,

who was married to a Jewish woman, had left Germany before World War II and taken a position in the physiology department at the University of Pennsylvania; Schwan thought that he might have influenced his being offered his first faculty position at the University of Pennsylvania.

- Hugo Fricke had studied physics in Copenhagen under Niels Bohr before moving to the United States, where he eventually joined the Cold Spring Harbor Laboratory where he conducted a series of experimental and theoretical studies on the dielectric properties of cell suspensions. His theoretical studies in the 1920s on the electrical properties of a cell, which were based on solution of Laplace's equation for membrane-covered spheres and ellipsoids, were the first rigorous model for the dielectric relaxation of cell suspensions. The work led to the first reliable estimates of the cell membrane capacitance of 0.01 farad/m^2. One of his theoretical papers on the subject (8) has been cited nearly 450 times as of early 2002.

Fricke was also an accomplished experimentalist, with an interest in practical applications of his work. In 1926, Fricke and Morse reported that the permittivity of neoplastic breast tissues (at 20 kHz) was higher than that of nonmalignant tumor and normal breast tissues, and suggested the feasibility of diagnosis based on this difference—presaging the modern field of impedance imaging (9). In his essay in 2001, Schwan remarked:

> In 1954 I organized a bioimpedance meeting in Chicago with Cole, Fricke and myself lecturing. Fricke and myself met there with a young man who showed us an impedance cell with a small orifice between the electrodes. His name was Coulter. We thought that it was a clever idea. This cell counter became one of the most successful bioimpedance devices ever.

Fricke was also well known in radiobiology. The Radiation Research Society honored him by publishing a special issue of its journal when he reached the age of seventy.

- K.S. ("Kacy") Cole was trained as a biophysicist, and had spent a year with Peter Debye in Leipzig. He became interested in electrical circuit analysis and synthesis and their usefulness as models for the frequency-dependent impedance properties of cells. His early work included extensive experimental dielectric studies on cell suspensions. His two-part paper in 1941–1942, (10, 11) (written in collaboration with his brother Robert) proposed what is now referred to universally as the Cole-Cole function, which describes dielectric relaxation characterized by a distribution of relaxation times. The first of these papers has been cited nearly 3000 times as of this writing. Cole invented the voltage clamp, and in the late 1930s, did his famous work with Curtis at Woods Hole, studying the variation in the impedance of the squid axon during excitation. This work motivated the studies of Hodgkin and Huxley, leading to Nobel prizes for these scientists (but not, unfortunately, to Cole).

Annu. Rev. Biomed. Eng. 2002.4:1-27. Downloaded from arjournals.annualreviews.org
by UNIVERSITY OF PENNSYLVANIA LIBRARY on 02/14/05. For personal use only.

Annu. Rev. Biomed. Eng. 2002.4:1-27. Downloaded from arjournals.annualreviews.org
by UNIVERSITY OF PENNSYLVANIA LIBRARY on 02/14/05. For personal use only.

Thus, Schwan began his scientific career at a time when the electrical properties of cells and tissues had attracted the attention of some of the foremost scientists of the day. The research problems they explored became core issues in the new discipline of biophysics. Although this work certainly had practical applications and involved building sophisticated instrumentation, it was essentially scientific in purpose. Schwan's outlook over the years has remained principally scientific (focused on acquiring and examining new knowledge), rather than technological (focused on building artifacts of practical application). He also inherited the insistence of Fricke, Cole, and others for quantitative understanding of experimental data through rigorous solution of (perhaps simplified) theoretical models, and was seldom satisfied with simply reporting phenomena.

SCIENTIFIC CONTRIBUTIONS

Schwan maintained an active scientific career at the University of Pennsylvania for more than three decades as an active faculty member, and for more than 15 years after reaching emeritus status. He directly supervised the Ph.D. theses of 18 students and played an indirect role in supervising many others. A number of his former students [Edwin L. Carstensen (Ph.D. 1955), David B. Geselowitz (1958), Clifford D. Ferris (1959), John M. Reid (1965), Richard B. Beard (1965), and Banu Onaral (1978)], have gone on to head departments or programs in bioengineering or hold chaired professorships in the field. Two (Carstensen and Geselowitz) have become members of the National Academy of Engineering for work in biomedical engineering related to ultrasound and electrocardiography, respectively. Schwan's resume lists more than 300 papers and nearly 400 lectures.

Schwan's major scientific contributions can be divided into several broad areas.

Dielectric Properties of Tissues and Biological Materials

By the early 1940s, the dielectric properties of cell suspensions had been well studied in the radiofrequency range (roughly, over the kHz and low MHz range), and the electrical conductivity (and more rarely, the permittivity) of several tissues had been reported by several investigators. The large dispersion in cell suspensions and blood centered near 1 MHz (which became known in Schwan's terminology as the beta dispersion), had been shown by Cole and others to arise from charging of the membrane capacitance. But data over a wider frequency range were very sparse, and there were few systematic studies of the dielectric properties of tissues. It was clear that many interesting dielectric phenomena in biological systems remained to be investigated (Figure 2).

Much of Schwan's early work at the University of Pennsylvania was directed at measuring the dielectric properties (conductivity and permittivity) of tissues over a far wider frequency range than previously explored, and interpreting the data in terms of theories for the dielectric properties of mixtures. This work

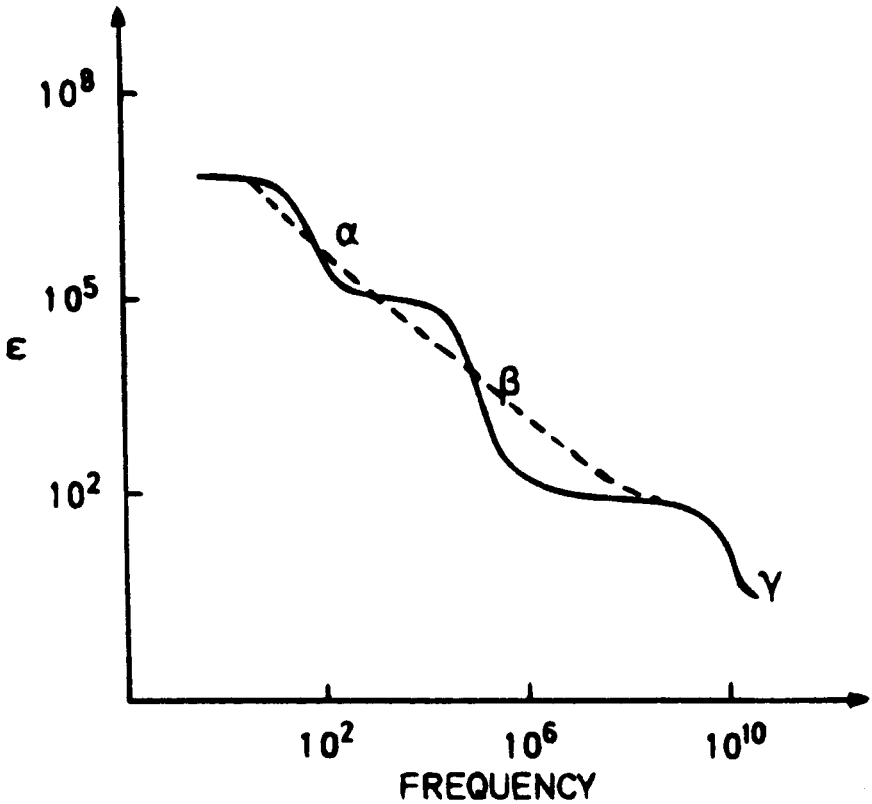

Figure 2 Dielectric permittivity of a typical soft tissue such as muscle, showing different dispersion regions labeled according to Schwan's terminology. By the end of the 1940s, extensive data existed only for some cellular suspensions at radiofrequencies in the kHz to low MHz range. From Ref. (18).

Annu. Rev. Biomed. Eng. 2002.4:1-27. Downloaded from arjournals.annualreviews.org
by UNIVERSITY OF PENNSYLVANIA LIBRARY on 02/14/05. For personal use only.

continued, in one form or other, for the remainder of his professional career. This work characteristically combined the development of sophisticated instrumentation and measurements on diverse biological materials—all thoroughly analyzed using quantitative theories.

One important element of this work was the study of the dielectric properties of tissues and cell suspensions at low frequencies (kHz range and below). Developing precision instrumentation for measurements at low frequencies required overcoming daunting problems due to electrode polarization artifacts and the very low electrical phase angle of the impedance.

Beginning with his work in the Navy lab, Schwan developed a low-frequency impedance bridge with unsurpassed resolution, and developed and refined techniques for overcoming electrode artifacts. He discovered a new effect—an

Annu. Rev. Biomed. Eng. 2002.4:1-27. Downloaded from arjournals.annualreviews.org
by UNIVERSITY OF PENNSYLVANIA LIBRARY on 02/14/05. For personal use only.

enormous low-frequency dielectric dispersion (which he termed the alpha dispersion) in tissues and later in colloidal suspensions of polystyrene particles.

Working with Schwan while on sabbatical at the University of Pennsylvania, Gerhard Schwarz (a theoretical physicist from the University of Basel) developed the first theory for this effect and applied it to the data from suspensions of polystyrene spheres (12). In this model, the polarization arises from the diffusion of counterions along the surface of the particles. The work spurred several decades of theoretical and experimental study by a number of groups, many interested in physics of colloid systems. The presently accepted theory for the phenomenon [e.g., Reference (13)] involves a considerably different process (diffusion of ions in the bulk electrolyte surrounding the particles) and is vastly more complex mathematically than the original 1962 theory. Nevertheless, this early work, in particular his 1962 paper with Schwarz, remains highly cited, retaining its attractiveness undoubtedly because of its simplicity and physical insight. As Schwan has pointed out many times, tissues also exhibit an enormous dielectric polarization at low frequencies, but it is difficult to separate counterion polarization (as seen in colloidal particles in electrolytes) from other effects related to tissue structure.

Another approach that Schwan developed was the use of four-electrode techniques to overcome electrode polarization problems at low frequencies. In this method, current is passed between two electrodes, and the induced voltage in the specimen is measured with a second set using a high-input impedance amplifier. He discovered that electrode artifacts still remained unless the electrodes were shielded from the tissue being examined, and he developed measurement cells to overcome the problem (Figure 3*a*,*b*).

Struggles with electrode polarization artifacts led Schwan to a career-long interest in the electrical impedance properties of electrodes and their dependence on frequency and current density. One later contribution of this work was the development of a nonlinear model for electrode impedance that explained the limits for the nonlinearity in electrode impedance that is observed at higher current densities (14).

Other work extended the RF-frequency range studies of Cole and Fricke to other systems including bacteria, cellular organelles such as mitochrondria, PPLO (pleuro-pnumonia-like organism), and several vesicle systems. Schwan and colleagues demonstrated that the capacitance of the membranes in these structures is similar to that of other cells. Many of these studies were done using a specially developed cell (Figure 4) and the Boonton RX meter, which he pushed to the limits of its capacity.

Still another important line of work involved the dielectric properties of tissues at high frequencies. Beginning in his days in Frankfurt, Schwan and his coworkers developed methods for high-frequency measurements of dielectric properties of tissues, at frequencies ranging upwards of 100 MHz to approximately 10 GHz. Such measurements also involve formidable difficulties in overcoming parasitic

Annu. Rev. Biomed. Eng. 2002.4:1-27. Downloaded from arjournals.annualreviews.org
by UNIVERSITY OF PENNSYLVANIA LIBRARY on 02/14/05. For personal use only.

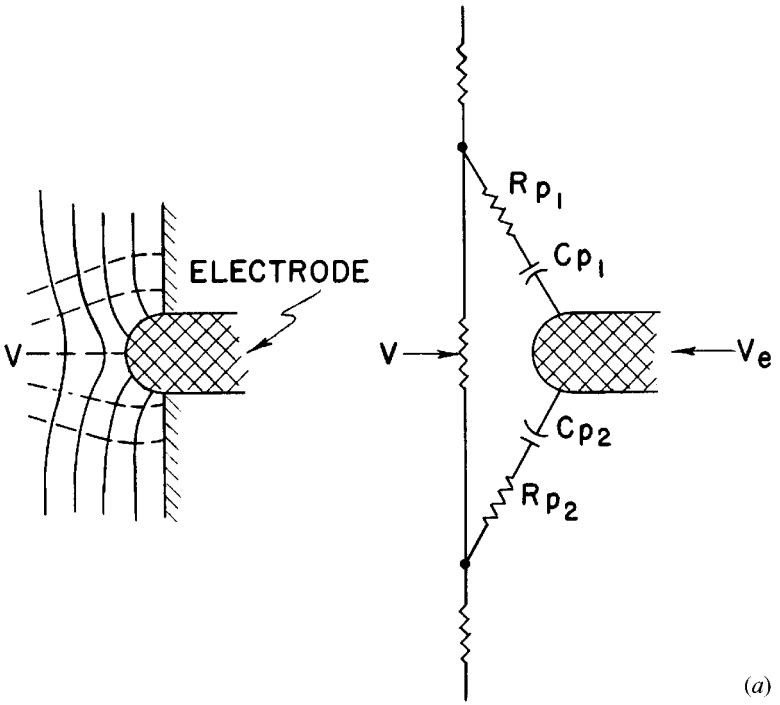

Figure 3 Schwan's analysis of artifacts in four-electrode method for measuring dielectric properties of tissues. (The method is still widely used.) (*a*) Left panel shows the effect of the voltage-sensing electrode on the field pattern, which introduces a coupling between the field and the electrode, as shown in the equivalent circuit in the right panel. (*b*) (*next page*) Schwan's solution was to enclose the voltage-sensing electrode in a reentrant cavity, out of contact with the field. This overcomes a subtle potential artifact related to electrode polarization in four-electrode measurements.

effects and ensuring adequate mechanical precision. Another nontrivial problem, in those days before the computer, was the fact that the dielectric properties of the sample were related to the measured properties (the reflection coefficient from the sample holder) in a highly nonlinear way. During his early years, Schwan developed a resonance technique involving a novel open transmission line, which did away with the need for highly precise machine work and yielded good accuracy up to approximately 1.5 GHz (Figure 5).

At high frequencies, the dielectric properties of tissues (and other high water-content materials) are dominated by the dielectric properties of water, which exhibit a dielectric dispersion centered at approximately 20 GHz due to rotational diffusion of the water dipoles. In addition to this dispersion (which he termed the gamma dispersion), Schwan investigated another smaller dispersion in the range

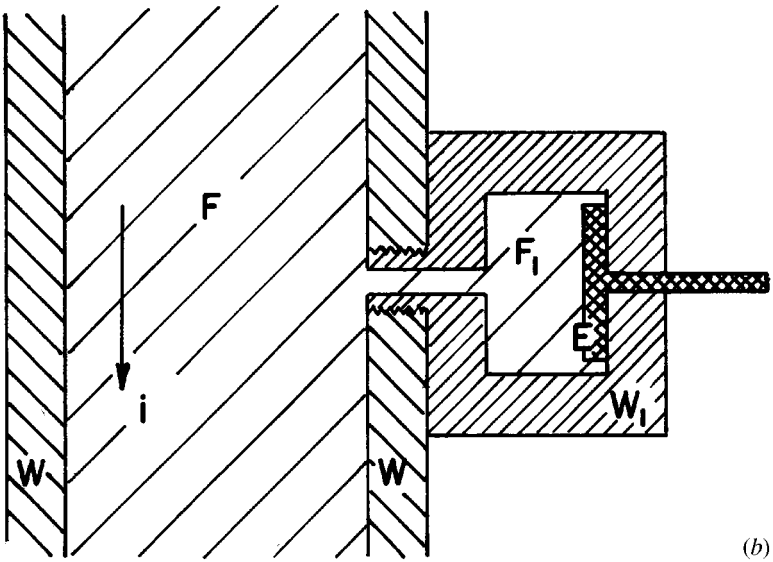

Figure 3 (*Continued*)

of hundreds of MHz, which Grant later termed the delta dispersion. Schwan attributed this to dielectric relaxation of water molecules bound to protein molecules and other surfaces in the tissue. Schwan and colleagues began a series of studies that explored the dielectric properties of bound water in tissues and solutions of proteins including hemoglobin [e.g., Reference (15)].

These studies were conducted at a time of great interest in "bound water" near protein surfaces, and numerous spectroscopic and thermodynamic studies had appeared on protein solutions and powders. Several investigators had reported dielectric studies on protein solutions and interpreted small dispersions as arising from rotational diffusion of bound water. But protein solutions show dielectric dispersions over a broad frequency range due to various mechanisms that are difficult to isolate experimentally. Investigators seemed to find "bound water" dispersions at almost any frequency that their instrumentation allowed them to investigate. Schwan's dielectric studies were arguably the most sophisticated and sustained studies on the subject. His analysis, using a dielectric mixture theory originating from Maxwell and extended by Fricke and others, made a strong case that the bound water dispersion occurred at frequencies approximately tenfold lower than that of bulk water, and involved water corresponding in quantity to a monolayer or so around protein molecules.

The polywater debate began in 1966, and some investigators began to publish striking claims about the properties of "biological water." Schwan's dielectric studies lent powerful support to the more conservative view that most cell water is generally similar (at least in its dynamic properties) to ordinary bulk water, with a

Annu. Rev. Biomed. Eng. 2002.4:1-27. Downloaded from arjournals.annualreviews.org
by UNIVERSITY OF PENNSYLVANIA LIBRARY on 02/14/05. For personal use only.

Annu. Rev. Biomed. Eng. 2002.4:1-27. Downloaded from arjournals.annualreviews.org
by UNIVERSITY OF PENNSYLVANIA LIBRARY on 02/14/05. For personal use only.

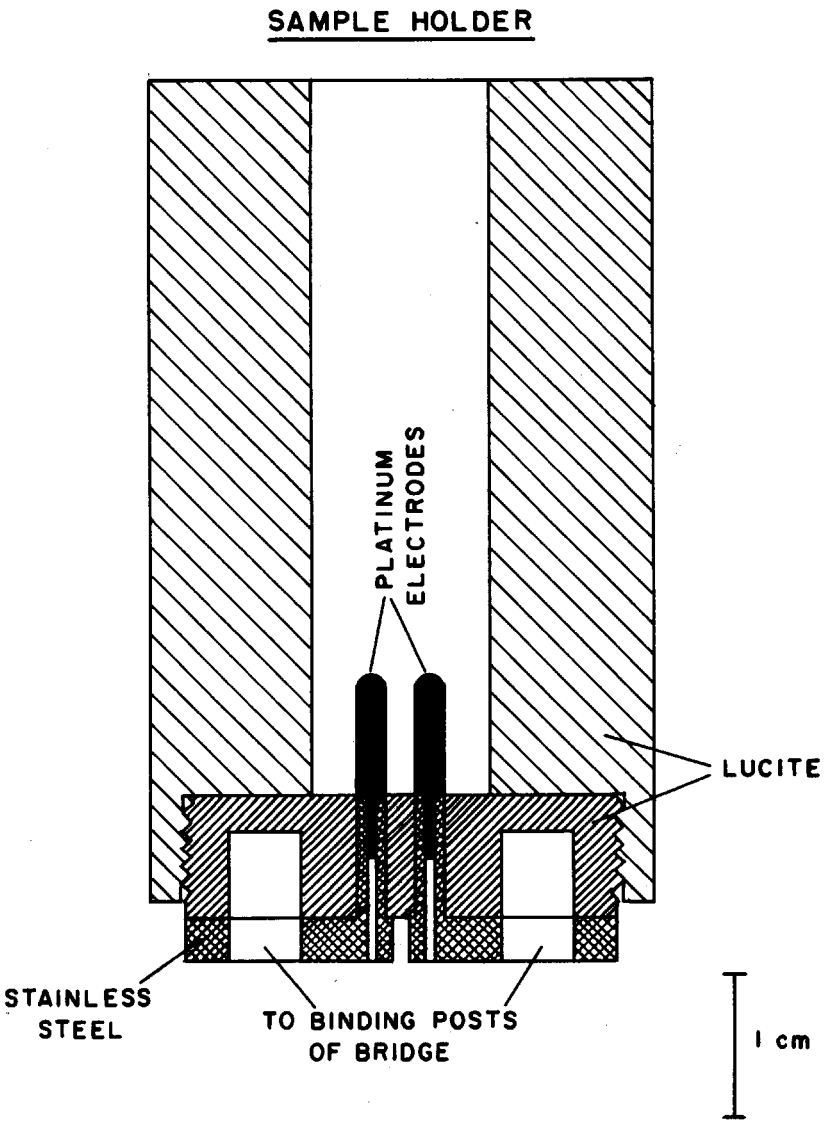

Figure 4 Cell with platinum electrodes used by Schwan and his students for many dielectric studies on biological suspensions at radiofrequencies. The electrodes near the bottom of the cell are coated with platinum black. From Ref. (19).

small fraction that is motionally restricted due to its proximity to protein surfaces (16).

Schwan's long interest in dielectric properties of biological materials led to three major review articles that remain widely cited today. Two pertain to dielectric properties of biological materials and their biophysical interpretation (17, 18), and

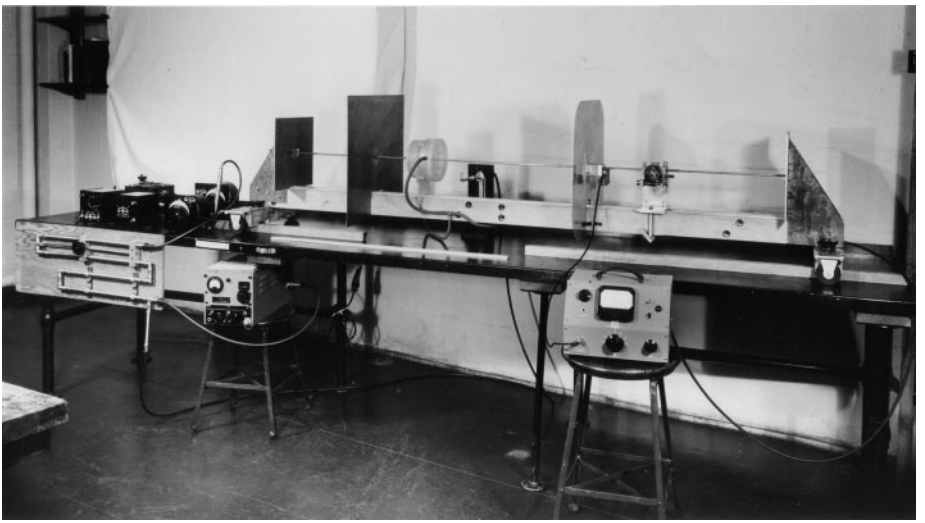

Figure 5 Open circuit transmission line used for dielectric measurements at UHF and microwave frequencies in the mid 1950s. The method avoided the need for high precision machining and yielded accurate measurements on tissues up to approximately 1.5 GHz.

Annu. Rev. Biomed. Eng. 2002.4:1-27. Downloaded from arjournals.annualreviews.org
by UNIVERSITY OF PENNSYLVANIA LIBRARY on 02/14/05. For personal use only.

the third to measurement techniques (19). The 1957 and 1963 review articles, with approximately 600 and 500 citations (as of early 2002) are surely among the most widely cited articles in bioengineering today.

Biophysics of Ultrasound

Perhaps as a result of his early association with physical medicine at the University of Pennsylvania and contact with Edwin Carstensen, a graduate student working with him, Schwan developed an interest in the biophysics of ultrasound. Together with Carstensen (now professor emeritus from the University of Rochester and a member of the National Academy of Engineering) and other collaborators, Schwan began to publish papers on medical ultrasound as early as 1952 (20).

Schwan's papers on the subject of biomedical ultrasound cover a wide area: ultrasonic heating of tissue, the mode of propagation of ultrasound into inhomogeneous tissue layers (such as skin, fat, and muscle), and the relative advantages of ultrasonic and microwave diathermy techniques in medicine. However, the greatest amount of work by far was done on more biophysical subjects—ultrasonic attenuation and scattering by tissues and protein solutions, with an emphasis on the underlying mechanisms. In the course of this work, Carstensen and Schwan developed precision methods for measurement of the acoustic properties of biological materials at ultrasound frequencies, which were forerunners of those used today (Figure 6).

Using this apparatus, Carstensen and Schwan and other collaborators conducted precise measurements on the ultrasound properties of proteins and other biological

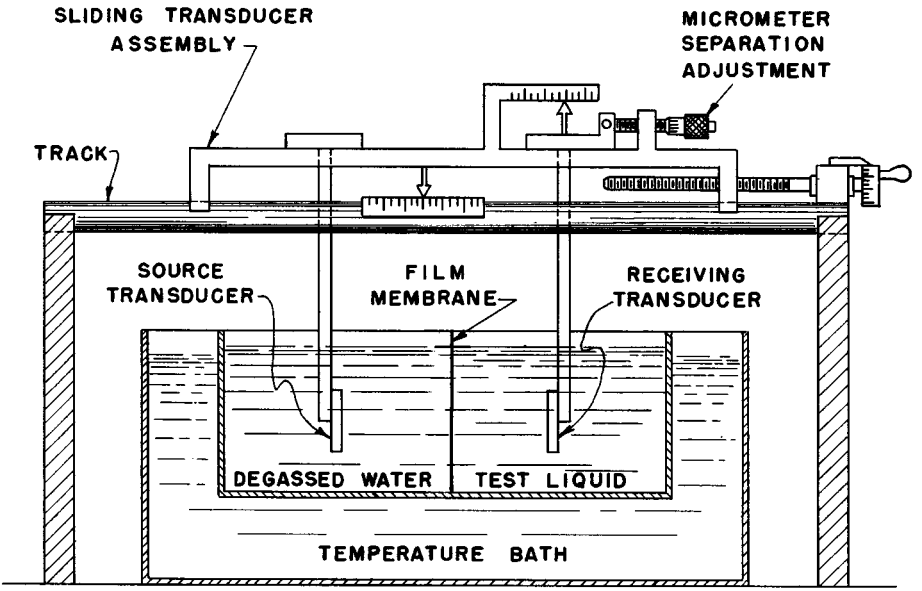

Figure 6 Method developed by Carstensen and Schwan for measurement of ultrasound attenuation and scattering properties of tissues and biological suspensions. From Ref. (20).

Annu. Rev. Biomed. Eng. 2002.4:1-27. Downloaded from arjournals.annualreviews.org
by UNIVERSITY OF PENNSYLVANIA LIBRARY on 02/14/05. For personal use only.

preparations. This work led to an understanding of the contribution of proteins to the ultrasonic attenuation by blood (with Carstensen) and tissues (with Pauly)—as well as an appreciation of the daunting problems in measuring and interpreting such data from highly scattering tissues such as lung (21). As time went on and Schwan became increasingly committed to studies involving electromagnetic fields, he reluctantly scaled back his activities in biomedical ultrasound. Carstensen continued in the field and became a distinguished investigator on biomedical ultrasound and dielectric spectroscopy of cell suspensions at the University of Rochester.

Interaction of Electromagnetic Fields with Biological Systems

Schwan's interest in the electrical properties of tissues and their biophysical interpretation soon extended to the effects of electromagnetic fields on biological systems themselves, including the contentious issue of possible health hazards of electromagnetic fields. This work led the Bioelectromagnetics Society to present Schwan with its d'Arsonval Award (its first) in 1985 for being a "consummate architect of the scientific fundamentals on which stands the specialty of Bioelectromagnetics."

Schwan's contributions to the vexing issue of health effects of electromagnetic fields came in two major areas. The first pertained to the mechanisms of interaction. Strongly influenced by Cole, Fricke, and others, Schwan attempted to understand

Annu. Rev. Biomed. Eng. 2002.4:1-27. Downloaded from arjournals.annualreviews.org
by UNIVERSITY OF PENNSYLVANIA LIBRARY on 02/14/05. For personal use only.

mechanisms of interaction through a sophisticated application of physical theory to biophysical data, often using circuit models and other electrical models for biological systems suggested by the theories of Laplace and Langevin. This led to numerous papers and reviews that summarized interaction mechanisms over a wide frequency range and their thresholds for producing noticeable biological effects, e.g., (22).

As a result of these interests, and from committee work with government agencies (initially the U.S. Navy), Schwan became a dominant figure in the recurring debates about biological effects of electromagnetic fields. In endless hallway conversations, questions during conferences, lectures, letters, papers, and committee reports, he was forever estimating induced fields, predicting cutoff frequencies and thresholds for responses, testing the consistency of new theories with established principles of biophysics, and searching for potential experimental artifacts. Such questioning is, of course, expected of scientists, but (by virtue of his training in biophysics and analytical skills) Schwan's analysis was unusually penetrating and quantitative and characteristically subtle as well. His propensity for sustained scientific discussion, his strong will, and (by American sensibilities) slightly formal manner gave him a reputation in some quarters as being formidable; this was entirely belied by his gracious manners in person.

Sometimes Schwan's questions resulted in interesting new science. More often, they would uncover inconsistencies or potential artifacts in data (a frequent occurrence, given the preliminary nature of many bioeffects studies) or poke holes in theories. As might be imagined, this led to sometimes heated discussions with believers in weak-field effects. Schwan invariably focused on scientific issues and foreswore ad hominem attacks and invective arguments. His scientific opponents in these discussions were not always so kind.

One of his first contributions to this subject appeared in his 1943 paper with Schäfer in "selective heating of small particles" by RF fields (23). This study responded to claims by several investigators in the 1930s that cells and other small particles could experience "point heating" by RF fields, which provided (it was said) a mechanism for biological effects in the absence of noticeable bulk heating. Schäfer & Schwan pointed out that rates of heat transfer in small particles are far too great to allow significant point heating (Figure 7). Incredibly, point heating is still proposed occasionally as a possible mechanism for biological effects of radiofrequency energy, most recently from cell phone radiation (24).

Schwan devoted considerable effort to the study of nonthermal effects as well. Particularly noteworthy is his work on electrically induced forces on cells and colloidal particles, including the so-called pearl chain effect (in which an alternating electric field causes particles to line up in chains) and electrically induced rotation of cells. These effects had been known for most of the twentieth century, but remained poorly understood. In the absence of a quantitative understanding of the phenomenon, it was difficult for early investigators to separate purely physical effects from biological responses of the cells.

Schwan and colleagues developed a biophysical theory for the phenomenon by calculating the electrically induced forces between cells (Figure 8). His work with

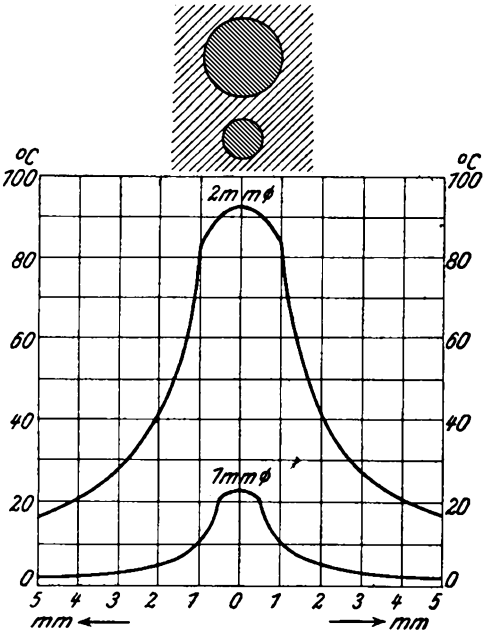

Abb. 1. Temperaturfeld in einer Wasser-in-Öl-Emulsion.
Tröpfchen-ϕ: 2 bzw. 1 mm. Wellenlänge 3 m.
Äußere Feldstärke: 4500 Volt/cm

Figure 7 Early analysis by Schwan on the possibility of "point heating" by RF fields of small structures in tissue. Schwan pointed out that the temperature increase scales as the square of the diameter of an absorbing particle, which negates the possibility of significant heating of microscopic particles in tissue by RF fields of reasonable intensity. From Ref. (23).

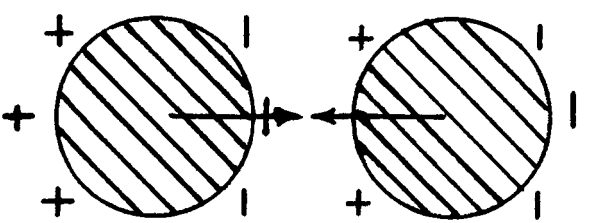

Figure 8 Origin of pearl chain effect. The attraction between two colloidal particles arises from the electrical interaction between their dipole moments that are induced by the external field.

Annu. Rev. Biomed. Eng. 2002.4:1-27. Downloaded from arjournals.annualreviews.org
by UNIVERSITY OF PENNSYLVANIA LIBRARY on 02/14/05. For personal use only.

Annu. Rev. Biomed. Eng. 2002.4:1-27. Downloaded from arjournals.annualreviews.org
by UNIVERSITY OF PENNSYLVANIA LIBRARY on 02/14/05. For personal use only.

L. Sher (who earned his Ph.D. with Schwan in 1963) was the first quantitative study on pearl chain formation. The work showed that experimentally measured thresholds for this effect agreed well with the theory that Schwan and colleagues developed. The effect is now well established to arise from induced dipole–induced dipole interactions between the cells, i.e., it is a purely physical phenomenon that is found in colloidal particles of all types.

Later, Schwan turned his attention to a related phenomenon: the rotation of a cell when placed in a circularly polarized electric field. Careful experimental and theoretical work by Schwan and colleagues [particularly M. Saito and G. Schwarz, e.g., Reference (25)] led to a rigorous explanation of the rotation of nonspherical cells when placed in a circularly polarized AC field. Schwan pointed out the complementary nature of these two effects: the pearl chain effect is related to the real part of the induced dipole moment of the particles, whereas electrorotation is related to the imaginary part.

Both the pearl chain effect and electrorotation are manifestations of dielectrophoretic forces that are observed in many particulate systems and have considerable practical importance (26). These effects are "nonthermal" in that they involve direct interactions between biological structures and electric fields; however, they require high field strengths to produce detectable responses, which necessitates careful temperature control of the preparation.

Schwan's second major area of contribution to understanding the interaction of RF fields with biological systems was more engineering in nature. He and several colleagues undertook some of the first studies to quantify the absorption of electromagnetic energy by tissues and the whole body. This work began with an emphasis on diathermy and physical medicine, but soon extended to hazards from exposure to RF fields. The work began with early reviews on the physics of tissue heating by RF or ultrasonic fields (27) oriented towards therapeutic applications of the energy.

Later, Schwan and colleagues became interested in the absorption of RF energy by the whole body, which depends on the antenna characteristics of the body. With Ph.D. student A. Anne (Ph.D. 1963), Schwan developed physical models of the human body that were filled with solutions of appropriate dielectric properties to mimic the body. Using a large microwave anechoic chamber and microwave transmitter, Anne and Schwan measured the electromagnetic energy absorbed in the body when exposed to RF fields (Figure 9). This line of investigation proved immensely fruitful, and has been extended by other investigators, most prominently at the Universities of Washington and Utah, and more recently at Brooks Air Force Base (San Antonio, Texas) and other institutions.

As an extension of this experimental work, Schwan and H. Kritikos (in the Electrical Engineering Department at Penn) studied the absorption of RF energy by tissue spheres. This work, published in 1972 (28), was one of the first quantitative analyses of the antenna resonance of the human body at radiofrequencies (Figure 10). Characteristically of Schwan and his collaborators, this work was based on analytical theory (Mie scattering theory). Many numerical studies have been done since that time by other investigators that fill out the basic picture that these early studies provided.

Annu. Rev. Biomed. Eng. 2002.4:1-27. Downloaded from arjournals.annualreviews.org
by UNIVERSITY OF PENNSYLVANIA LIBRARY on 02/14/05. For personal use only.

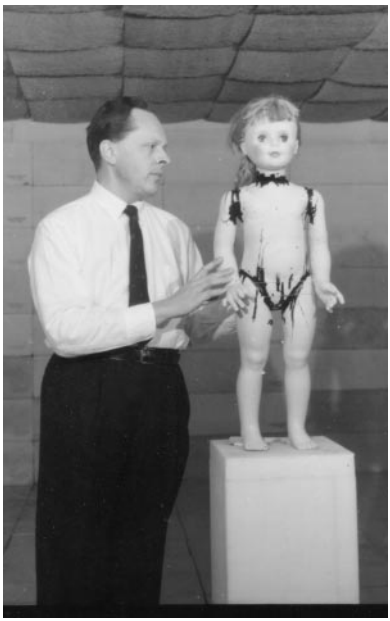

Figure 9 Schwan with model of human body used for RF dosimetric studies. The model is filled with tissue-equivalent liquids and exposed to RF energy in a microwave-anechoic chamber that Schwan had constructed in his laboratory. Photograph from ca. 1963.

Because of these research interests, Schwan became active on numerous scientific committees investigating possible health and safety issues. His letter to the U.S. Navy in 1953, proposing a safe limit for human exposure to microwave energy of 100 W/m^2 (based on thermal analysis), became the basis for exposure standards in the United States and elsewhere. These standards have evolved over the years (in particular, they acquired a frequency dependence that reflects that of the absorption cross section of the human body) but without fundamentally changing their scientific basis. Among many other committee activities in this field, he chaired the committee that established the first (1965) United States exposure limit for RF energy, for the American National Standards Institute.

SCHWAN AND THE EMERGENCE OF THE PROFESSION OF BIOENGINEERING

As the field exists today, bioengineering (or, equivalently biomedical engineering) is a loose accretion from several different intellectual streams: physics, biology, medicine, and various engineering disciplines. Historical accident has clearly

Annu. Rev. Biomed. Eng. 2002.4:1-27. Downloaded from arjournals.annualreviews.org
by UNIVERSITY OF PENNSYLVANIA LIBRARY on 02/14/05. For personal use only.

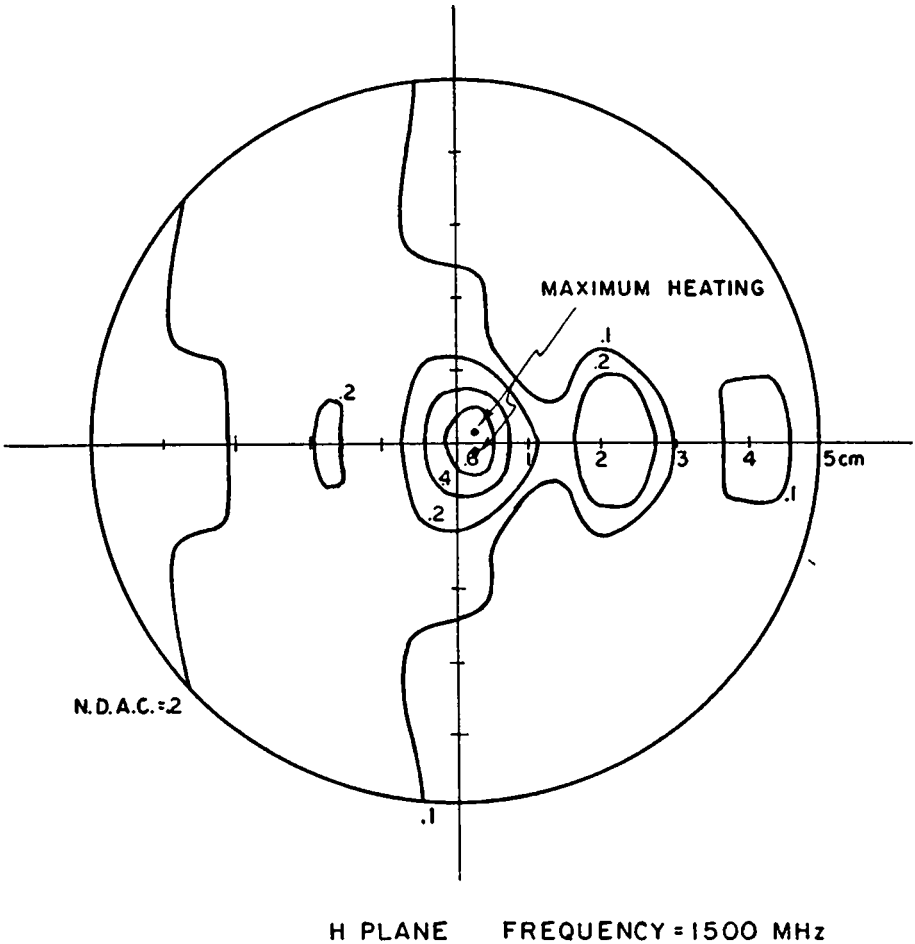

Figure 10 Patterns of microwave energy absorption in a cross section of a sphere. From Ref. (28).

played a considerable role in the emergence of the field. Boris Rajewsky, Schwan's mentor in Frankfurt, was a professor of biophysics and physical foundations of medicine, whose chief claims to fame involve studies with ionizing radiation. He plays a much more prominent role in the history of health physics—a field that at present has only loose ties to biomedical engineering.

Reflecting his early encounters with engineers in industry and his work with radiofrequency technology in Rajewsky's laboratory, Schwan's career took a different turn: He became a seminal figure in what is now known as bioengineering. Schwan has recounted his activities in this area in several articles (29–31), from which these comments are largely based.

Early Organizations in Biomedical Engineering

Present organizations in bioengineering evolved from a rather confused set of organizations that evolved after the Second World War. The Institute for Radio Engineers (IRE) and American Institute for Electrical Engineering (AIEE) formed administrative committees interested in engineering in medicine and biology. Schwan, recently arrived in the United States, joined the AIEE-EMB (Engineering in Medicine and Biology) Committee and then the Administrative Committee (AdCom) of the IRE Professional Group on Medical Electronics (later named the IRE Professional Group on Engineering in Medicine and Biology). These committees formed the Joint Executive Committee on Medicine and Biology (JCEMB) to organize the Annual Conference of Engineering in Medicine and Biology.

Initial conferences (beginning in 1948) focused on bioeffects and medical applications of ionizing radiation, and often they were poorly attended. Working as a member (later chair) of JCEMB, Schwan expanded the scope and attractiveness of these conferences to engineers. He recruited Otto Schmitt (1913–1988) (the inventor of the Schmitt trigger circuit) to chair the 1958 conference in Minneapolis, with the theme of computers in medicine and biology, which attracted nearly 400 participants. Schwan organized the 1959 conference in Philadelphia, with a theme of bioeffects and applications of nonionizing radiation, and an attendance of about 500. He was program chair of the 1961 annual and IFEMB conference (3000 participants), and conference chair for the 1965 conference (1500 participants).

Thus, by the early 1960s, Schwan and other early leaders had organized large and highly successful biomedical engineering meetings in the United States. There were, however, a number of different organizations involved, and early attempts to forge a major bioengineering society from these different constituencies had mixed success. During 1968–1969, the constitution of the Annual Conference was revised, to form the Alliance for Engineering in Medicine and Biology. The Alliance soon became an umbrella organization of a large number of organizations of varying interest in the field. Subsequently, for various reasons, its conferences began to decline.

Things came together through a different set of developments. In the late 1950s, the AIEE and IRE merged to form the present Institute of Electrical and Electronics Engineers (IEEE), resulting in three major committees interested in engineering in medicine with overlapping constituencies and interests. This created the need for what Schwan later termed the "somewhat delicate" task of consolidating redundant committees.

One of these committees, the IRE Professional Group on Medical Electronics (PGME) had grown to 2344 members by 1960 when Schwan became its chair. The PGME eventually became the IEEE Committee on Engineering in Medicine and Biology.

Schwan felt the need for the Committee to expand its scope to attract nonelectrical engineers and scientists with an applied biomedical orientation, and suggested that the IEEE allow the Committee to become a semi-independent

Annu. Rev. Biomed. Eng. 2002.4:1-27. Downloaded from arjournals.annualreviews.org
by UNIVERSITY OF PENNSYLVANIA LIBRARY on 02/14/05. For personal use only.

society within IEEE, with the ability to recruit engineers and scientists from a variety of relevant disciplines other than electrical engineering.

Schwan's plan failed to materialize. However, the Committee eventually became a full Society within the IEEE—the IEEE Society on Engineering in Medicine and Biology (IEEE EMBS). As such, EMBS remains the largest professional society in Bioengineering, with approximately 7500 members, but its appeal remains strongest to biomedical engineers oriented towards electrical engineering. Schwan was also a founding member of the Biomedical Engineering Society (BMES), which was chartered in 1968 and designed to appeal to a broader range of members in addition to electrical engineers. During the time of Schwan's most active professional activity, BMES struggled to attract sufficient members and its meetings were often poorly attended. Recently, BMES has found increased vigor (and rapid growth to its present size of approximately 3000 full and student members) as a home for newer fields such as tissue and cellular engineering and it has attracted major funding from the Whitaker Foundation. However, Schwan's dream of a comprehensive society that appeals to all engineers and biomedical scientists interested in bioengineering may be forever beyond reach, due to the vast diversity of interests of the people who consider themselves biomedical engineers.

Annu. Rev. Biomed. Eng. 2002.4:1-27. Downloaded from arjournals.annualreviews.org
by UNIVERSITY OF PENNSYLVANIA LIBRARY on 02/14/05. For personal use only.

National Institutes of Health and the Emergence of Bioengineering

By the mid 1950s, as biomedical engineering advanced, it began to attract the interest of the (U.S.) National Institutes of Health, and Schwan naturally became involved. By approximately 1960, the National Institute of General Medical Sciences (NIGMS) had established a Program Project Committee to encourage large grant applications, and Schwan became a member of it. The NIH also established a special study section on training grants in bioacoustics and biomedical engineering, and Schwan served as its first Chair.

Eventually, after the departure of the main champions of bioengineering from the NIH (F. Stone, the Director of the NIGMS, and J. Brown, its associate director), NIH disbanded its special study section on biomedical engineering and terminated the Program Project support for biomedical engineering. A difficult period for bioengineering in the United States then began, in which bioengineering grants had to compete with more medically oriented proposals in NIH study sections that often lacked sufficient engineering competence. Schwan considered the early NIH programs that were specially devoted to bioengineering to be important seeds for biomedical engineering in the United States. Bioengineering has recently returned to the NIH as a major activity, with the recent (2001) formation of the National Institute of Biomedical Imaging and Bioengineering.

In addition to his activities in bioengineering, Schwan became a leader in the emerging field of biophysics. He shared Otto Schmitt's dream of a large biophysical community that encompassed biomedical engineering together with medical physics, including the emerging activities in membrane and molecular

biophysics. He served as first Publicity Chairman of the new Biophysical Society for approximately five years, helping to attract large attendance at the annual meetings and, through well-attended press conferences, increased public visibility of biophysics. He also served four years as one of four United States representatives appointed by the National Academy of Sciences/National Research Council to represent the United States in the International Union of Pure and Applied Biophysics (IUPAB). The Biophysical Society remains the dominant professional society in the field, but its principal interests have shifted to a molecular and cellular level and away from macroscopic biophysics that was the focus of Schwan's work. An increasing number of investigators in bioengineering are working in areas related to cellular and molecular biophysics, and Schwan's dream of a broader biophysical community encompassing bioengineering and biophysics is still viable, at least for some fraction of the bioengineering community.

Annu. Rev. Biomed. Eng. 2002.4:1-27. Downloaded from arjournals.annualreviews.org
by UNIVERSITY OF PENNSYLVANIA LIBRARY on 02/14/05. For personal use only.

Emergence of Bioengineering at the University of Pennsylvania

While bioengineering was emerging on the national level, a strong bioengineering program was also developing under Schwan's leadership at the University of Pennsylvania. As head of the Electromedical Group of the Moore School of Electrical Engineering, in 1953–1954, Schwan organized a series of courses on medical electronics. Two were taught by Edwin Carstensen and Ernest Frank (who became a well-known researcher on electrocardiography). Schwan taught three courses: the interaction of electromagnetic fields with tissue, dielectric properties of biological cells and tissues, and instrumentation (focusing on bioimpedance instrumentation and bioelectrodes) in the engineering school, and another course on biophysics in physical medicine in the medical school. Schwan reached an agreement with J. Brainerd, the head of the Moore School of Electrical Engineering, to replace some of the traditional courses in the Ph.D. program with these courses, in effect starting a program in biomedical engineering.

In 1960, Schwan submitted a (successful) proposal for a Training Grant to NIH and lobbied for the establishment of a department in a bioengineering. As a compromise, the University established a Graduate Group in Biomedical Engineering in 1961, with Schwan as the first head, serving in this position for the next 13 years. This Graduate Group administered, in Schwan's later estimate, the first Ph.D. program in the field. The university established the Department of Bioengineering in 1973 (incorporating the Graduate Group and a new undergraduate program), and Schwan served as its chair until 1974. The department, one of the first of its nature, remains one of the largest programs in Bioengineering in the country.

Post Retirement Years

After his retirement from the University of Pennsylvania as Alfred Fitler Moore Professor Emeritus in 1983, Schwan remained active for many years, working with

groups in the United States and Europe on joint research projects. For many years he has been a member of the Max Planck Society as a foreign member, and he has also had recent appointments at Drexel University (Philadelphia) and the Universities of Kuopio (Finland) and Oslo (Norway). In addition, for many years Schwan made yearly (at least) trips to Frankfurt, Germany, to conduct joint research with colleagues at the Max Planck Institute for Biophysics. Another recent European collaborator has been U. Zimmermann (Wurzburg, Germany) on cell rotation and the use of electric field pulses to create pores in cell membranes (electroporation), which has important applications in biotechnology. Schwan published more than 60 papers after 1983, the year of his "retirement."

At present writing (in early 2002), Herman and Anne Schwan (Figure 11) still live in their house in Radnor, Pennsylvania. Schwan remains very much interested in science and still participates in scientific meetings in the United States and Europe from his customary location at first-row-center of meeting rooms. He and Anne are coping well with the physical infirmities of old age, and are visited frequently by their children and grandchildren.

Figure 11 Herman and Anne Schwan at their home in Radnor; summer 2000.

Annu. Rev. Biomed. Eng. 2002.4:1-27. Downloaded from arjournals.annualreviews.org
by UNIVERSITY OF PENNSYLVANIA LIBRARY on 02/14/05. For personal use only.

Annu. Rev. Biomed. Eng. 2002.4:1-27. Downloaded from arjournals.annualreviews.org
by UNIVERSITY OF PENNSYLVANIA LIBRARY on 02/14/05. For personal use only.

The *Annual Review of Biomedical Engineering* is online at http://bioeng.annualreviews.org

LITERATURE CITED[2]

1. Herman Schwan, Electrical Engineer, An Oral History conducted in 1992 by Frederick Nebeker, IEEE History Cent., Rutgers Univ., New Brunswick, NJ
2. Schwan W. 1929. *Elementare Geometrie*. Leipzig: Akad. Verlag. VI + 402 pp.
3. Kirsch A. 1981. Zum Gedenken an Wilhelm Schwan. *Math. Semesterber.* XXVIII (1):155–59
4. Rajewsky B. 1938. *Ergebnisse der Biophysikalischen Forschung in Einzeldarstellungen.* Leipzig: Thieme
5. Licht S. 1967. History of electrotherapy. In *Therapeutic Electricity and Ultraviolet Radiation*, ed. S Licht, pp. 1–70. Baltimore: Waverly. 2nd ed.
6. Kovács R. 1932. *Electrotherapy and the Elements of Light Therapy.* Philadelphia: Lea & Febiger. 528 pp.
7. Schwan HP. 2001. The concept of bioimpedance from the start: evolution and personal historical reminiscences. *Proc. IX Bioimpedance Conf.*, Oslo, Norway
8. Fricke H. 1924. A mathematical treatment of the electric conductivity and capacity of disperse systems, I. The electric conductivity of a suspension of homogeneous spheroids. *Phys. Rev.* 24:575–87
9. Fricke H, Morse S. 1926. The electric capacity of tumors of the breast. *J. Cancer Res.* 10:340–76
10. Cole KS, Cole RH. 1941. Dispersion and absorption in dielectrics. I. Alternating current characteristics. *J. Chem. Phys.* 9:341–51
11. Cole KS, Cole RH. 1942. Dispersion and absorption in dielectrics. II. Direct current characteristics. *J. Chem. Phys.* 10:98–105
12. Schwan HP, Schwarz G, Maczuk J, Pauly H. 1962. On the low-frequency dielectric dispersion of colloidal particles in electrolyte solution. *J. Phys. Chem.* 66:2626–35
13. Chew WC. 1984. Dielectric enhancement and electrophoresis due to an electrochemical double layer: a uniform approximation. *J. Chem. Phys.* 81:4541–52
14. Schwan HP. 1992. Linear and nonlinear electrode polarization and biological materials. *Ann. Biomed. Eng.* 20:269–88
15. Schwan HP. 1965. Electrical properties of bound water. *Ann. NY Acad. Sci.* 125:344–54
16. Schwan HP, Foster KR. 1977. Microwave dielectric properties of tissue: some comments on the rotational mobility of tissue water. *Biophys. J.* 17:193–97
17. Schwan HP. 1957. Electrical properties of tissue and cell suspensions. In *Advances in Biological and Medical Physics*, ed. JH Lawrence, CA Tobias, 5:147–209. New York: Academic
18. Foster KR, Schwan HP. 1989. Dielectric properties of tissues. In *Critical Reviews in Biomedical Engineering*, 17:25–104. New York: Begall House
19. Schwan HP. 1963. Determination of biological impedances. In *Physical Techniques in Biological Research*, ed. WL Nastuk, 6:323–406. New York: Academic
20. Piersol GM, Schwan HP, Pennell RB, Carstensen EL. 1952. Mechanism of absorption of ultrasonic energy in blood. *Arch. Phys. Med.* 33:327–32
21. Bauld TJ, Schwan HP. 1974. Attenuation and reflection of ultrasound in canine lung. *J. Acoust. Soc. Am.* 56(5):1630–37
22. Schwan HP, Foster KR. 1980. RF-field

[2]For a reprint collection of Schwan's major papers, see Reference (32) or contact sverre.grimnes@fys.uio.no or ogm@fys.uio.no. (ISBN 82-7642-008-7).

interactions with biological systems: electrical properties and biophysical mechanisms. *Proc. IEEE* 68:104–13
23. Schäfer H, Schwan HP. 1943. Zur Frage der selektiven Erhitzung kleiner Teilchen im Ultrakurzwellen-Kondensator Feld. *Ann. Phys. V* 43:99–135
24. Discussion from the floor at the workshop "Biological and Biophysical Research at Extremely Low- and Radio-Frequencies," Bad Münstereifel, Ger., 2000
25. Saito M, Schwan HP, Schwarz G. 1966. Response of nonspherical biological particles to alternating electric fields. *Biophys. J.* 6:313–27
26. Jones TB. 1995. *Electromechanics of Particles.* New York: Cambridge Univ. Press
27. Schwan HP, Piersol GM. 1954. Absorption of electromagnetic energy in body tissues—review and critical analysis (Part I. Biophysical Aspects). *Am. J. Phys. Med.* 33:371–404
28. Kritikos HN, Schwan HP. 1972. Hot spots generated in conducting spheres by electromagnetic waves and biological implications. *IEEE Trans. Biomed. Eng. BME* 19:53–58
29. Schwan HP. 1984. The development of biomedical engineering: historical comments and personal observations. *IEEE Trans. Biomed., Eng. BME* 31:730–36
30. Schwan HP. 1993. Early organizations of biomedical engineering in the US. *IEEE Eng. Med. Biol. Mag.* Sept:25–29
31. Schwan HP. 1990. Organizational development of biomedical engineering. *IEEE Eng. Med. Biol. Mag.* 3:25–33
32. Grimnes S, Martinsen ØG, eds. 2000. *Selected papers by Herman P. Schwan*. Oslo: Med.-Tek. Avd. Forl. 521 pp.

Annu. Rev. Biomed. Eng. 2002.4:1-27. Downloaded from arjournals.annualreviews.org
by UNIVERSITY OF PENNSYLVANIA LIBRARY on 02/14/05. For personal use only.