Department of Chemical & Biomolecular Engineering

Senior Design Reports (CBE)

University of Pennsylvania Year 2013

MANUFACTURING OF NON-EGG BASED INFLUENZA VACCINE

Erin Kinnevy
University of Pennsylvania

April Soohoo
University of Pennsylvania

Ian Penkala
University of Pennsylvania

John Vogel
University of Pennsylvania

Erin Kinnevy
Ian Penkala
April Soohoo
John Vogel

3300 Walnut St
Philadelphia, PA
April 9, 2013

Professor Leonard Fabiano
Dr. Miriam Wattenbarger
University of Pennsylvania, Chemical and Biomolecular Engineering

Room 311A Towne Building
220 South 33rd Street
University of Pennsylvania
Philadelphia, PA 19104-6393

Dear Advisors,

The following enclosure is a detailed design of our solution to the growing concerns regarding the traditional egg based platform for the flu vaccine. We propose an innovative process that uses insect cells and the baculovirus expression system to produce virus-like particles, mimicking influenza. The process is designed in such a way as to easily incorporate annual changes in influenza strain and virulence. Furthermore, the facility is designed to accommodate extensive vaccine production in pandemic crises. The facility will be based entirely on single-use equipment to decrease lag time between strain identification and vaccination availability and to insure strict adherence to FDA regulation. Our plant is expected to manufacture 86,184,000 doses of trivalent seasonal influenza vaccine, and it is capable of manufacturing 344,736,000 doses of monovalent influenza vaccines during a pandemic situation.

The enclosed report documents our entire design process and decisions that were made during the formulation of the vaccine and manufacture facility. The report also contains a competitive analysis, market analysis, and financial models of the vaccine company.

This report contains all necessary information about the cell line selection for vaccine production and selection of necessary equipment. With the use of this report, an existing vaccine company would be able to design a plant to produce a non-egg based flu vaccine. This report also provides all necessary information that the company would require in order to make a decision to invest or not invest in this new product.

We submit this report for your review with our strongest recommendations of the potential success of a new non-egg based influenza vaccine.

Sincerely,

Erin Kinnevy	John Vogel
Ian Penkala	April Soohoo

Manufacturing of Non-Egg Based Influenza Vaccine

CBE 459 – Spring 2013

Erin Kinnevy, Ian Penkala, April Soohoo, John Vogel

Project Advisor: Dr. Miriam Wattenbarger

Project Recommendation: Dr. Tiffany Rau

Table of Contents

1.0 Abstract……..1
2.0 Introduction……3
2.1 Project Charter……...7
2.2 Innovation Map……..8
2.3 Expression System Selection……...10
2.4 Baculovirus Expression System……...13
3.0 Concept Stage……..15
3.1 Total Market and Competitive Analysis……..15
3.2 Principle Competition Production Level and Sales……17
3.3 Customer Requirements……...18
3.4 Block Flow Diagram……19
4.0 Process Flow Diagrams……20
4.1 Upstream Process……21
4.2 Downstream Process……22
4.3 Overall Material Balance……23
4.4 Utility Requirements……24
5.0 Process Descriptions……25
5.1 Upstream Process……25
5.1.1 Shake Flasks……...25
5.1.2 Bag Bioreactors……..25
5.1.3 Harvest Bags……....26
5.1.4 Media Prep……26
5.1.5 Media Holding Bags……..27
5.2 Downstream Process……28
5.2.1 Centrifugation (Disk Stack Cent)……...28
5.2.2 Depth Filtration……..28
5.2.3 Virus Inactivation……..29
5.2.4 Anion Exchange Chromatography……29
5.2.5 Size Exclusion Chromatography……30
5.2.6 Tangential Flow Filtration……30
6.0 Major Unit Descriptions……..32
6.1 Equipment Selection……32
6.2 Upstream Process……35
6.2.1 Shake Flasks……..35
6.2.2 Aseptic Transfer Equipment……..35
6.2.3 Main Bioreactors……36
6.2.4 Pumps……37
6.2.5 Harvest Bags……..38
6.2.6 Pumps……38
6.2.7 Media Holding Bags……..38
6.2.8 500 L Holding Tanks……39
6.2.9 Pumps ……39
6.2.10 Sterile Filtration……40
6.2.11 3000 L Holding Tanks……...40

6.2.12 Heat Exchanger……..41
6.2.13 Cooler……41
6.3 Downstream Process……42
6.3.1 Disk-Stack Centrifuge……42
6.3.2 Pump……..43
6.3.3 Detergent Storage Tank……43
6.3.4 Pump……..43
6.3.5 Virus Inactivation Tank……44
6.3.6 Pump……..44
6.3.7 Depth Filtration……..45
6.3.8 Pump……..45
6.3.9 Depth Filtration Holding Tank……..46
6.3.10 Pump……..46
6.3.11 Chromatography Resin Storage Tank……47
6.3.12 Pump……..47
6.3.13 Anion Exchange Chromatography Column……...47
6.3.14 Pump……..49
6.3.15 Ion Exchange Holding Tank……..49
6.3.16 Pump……..49
6.3.17 Chromatography Resin Storage Tank……50
6.3.18 Pump……..50
6.3.19 Size Exclusion Chromatography Column……..….51
6.3.20 Pump ……51
6.3.21 Size Exclusion Holding Tank……52
6.3.22 Pump……..52
6.3.23 Tangential Flow Filtration……53
6.3.24 Pump……..53
6.3.25 Tangential Flow Filtration Holding Tank……..54
6.3.26 Pump……..54
6.3.27 Pump……..55
7.0 Additional Equipment……..56
7.1 Formulation & Final Packaging……...56
7.2 Filter Integrity Tester……...56
7.3 Tube Fusers/Tube Sealers……55
7.4 Biosafety Cabinet……57
7.5 Incubator……..57
7.6 Cryopreservation Bank……58
8.0 Unit Specification Sheets……59
8.1 Upstream Section……60
Shake Flasks……60-62
Pump……..63
50 L Bioreactor……..64
Pump……..65
500 L Bioreactor……66
Pump……..67
2000 L Bioreactor……..68

Pumps……...69-70
Media Storage Tanks……71-74
Pumps……...75-84
Depth Filtration……84-85
8.2 Downstream Section…….....86
Disk-Stack Centrifuge……86
Pump……..87
Detergent Storage Tank……88
Pump……..89
Virus Inactivation Tank……90
Pump……..91
Depth Filtration……..92
Pump……..93
Depth Filtration Holding Tank……...94
Pump……..95
Chromatography Resin Storage Tank……96
Pump……..97
Anion Exchange Chromatography Column……...98
Pump……..99
Ion Exchange Holding Tank……100
Pump……101
Size Exclusion Chromatography Column……102
Pump……103
Size Exclusion Holding Tank……..104
Pump……105
Tangential Flow Filtration……...106
Pump……107
Tangential Flow Filtration Holding Tank……108
9.0 Cost Summary……109
9.1 Upstream Section……...109
9.2 Downstream Section……..110
9.3 Additional Equipment and Processes……111
10.0 Important Considerations……112
10.1 Scheduling……112
10.1.1 Gantt Chart……...112
10.2 Environmental Concerns……..113
10.3 Current Good Manufacturing Practices……...114
10.4 Laboratory and Production Facility Layout……119
10.5 Labor Costs and Structure……120
11.0 Economic Analysis……..122
11.1 Market Analysis……...122
11.2 Profitability Analysis……...129
11.2.1 Equipment Costs and Total Permanent Investment……130
11.2.2 Working Capital and Utilities……..132
11.2.3 Other Variable Costs……132
11.2.4 Fixed Costs……..133

11.2.5 Depreciation…….133
11.3 Input Summary…….134
11.4 Profitability Analysis……...135
11.4.1 Profitability Analysis Results (20% Efficiency)……..135
11.4.2 Profitability Analysis Results (26% Efficiency)……..141
11.4.3 Profitability Analysis Results (50% Efficiency)……..148
11.4.4 Profitability Analysis Results (Pandemic Case)……..155
11.5 Sensitivity Analysis……162
11.5.1 Efficacy and Dosing……162
11.5.2 Gross Revenue……167
12.0 Conclusions and Recommendations……171
13.0 Acknowledgements……..172
14.0 Bibliography……174
Appendix A – Calculations……..180
Cell Growth Rate……180
VLP Production & Yield……182
Batch Times……184
Toxicology Studies……..186
Proof of Concept Studies……186
Vaccine Formulation……187
Heat Exchanger Design & Calculations……..188
Labor Force and Structure……...190
Cost Analysis of Single-Use vs. Traditional Facilities……192
Appendix B – Sensitivity Analysis……..193
20% Downstream Efficiency……...193
36% Downstream Efficiency……...195
50% Downstream Efficiency……...197
Appendix C – SuperPro Designer Stream Reports……..199
Appendix D – Gantt Chart Data……...201
Appendix E – Material Safety Data Sheets
Appendix F – Production Specification Sheets

1.0 Abstract

Influenza is an annual health hazard with only about one-third of people in the United States receiving vaccinations for this pathogen. Epidemics are estimated to affect between 5% and 15% of the global population annually. Annually, the WHO estimates epidemics to result in between 3 and 5 million severe cases which lead to between 250,000 and 500,000 deaths. In industrialized countries, most of these deaths occur among victims who are chronically ill or are 65 years of age or older. In developing countries, particularly in tropic areas where transmission occurs year round, there is a higher rate of death to infection. For example in 2002, Madagascar experienced 800 deaths in 27,000 recorded cases of influenza over a 3 month period (WHO).

Recently, international awareness, spearheaded by the World Health Organization (WHO), has been paid to influenza since the pandemic outbreak and subsequent vaccine shortage during the H1N1 outbreak. Since then the WHO has published a set of guidelines to encourage production of safer and increasingly potent influenza vaccines for a greater number of recipients each year. WHO is attempting to increase public and private sector awareness of the importance of influenza vaccination to prevent any subsequent pandemics.

Current vaccines are produced in live, embryonated chicken eggs resulting in potential allergic reactions from animal products in the vaccines. Furthermore, this process is time-consuming and labor intensive, and the live, attenuated virus is considered to be a potential health risk for populations with suppressed immune function such as children, the elderly, and those who are sick or immunocompromised. Egg shortages can cause massive vaccine shortages, especially since only two companies

currently produce most of the United States' influenza vaccines. We propose that virus-like particles offer a more robust and safer alternative to current vaccine manufacturing. Currently, FluBlok™ is a product that utilizes recombinant influenza antigens to produce a vaccine. We plan to take this strategy another step to creating replication-deficient, native conformation viruses to induce an immune response. These particles will retain all structural similarity to native virus and have been shown to produce more robust responses with smaller doses. Furthermore, these particles will carry no risk of influenza infection upon administration. Virus-like particles will become the next generation of vaccines, such as those for human papilloma virus currently manufactured, and should rectify the problems associated with egg-based production of influenza vaccines.

The proposed process is a fed-batch operation that will create about 100 million influenza vaccines during each influenza infection season from November to February, using insect cell lines and the baculovirus expression vector system (BEVS) to induce lytic formation of virus-like particles. This process will be performed in a single-use, disposable fermentation train with single-use components integrated in the purification process to take advantage of the timesaving techniques and disposable equipment. The production of influenza vaccines is time-sensitive with a limited duration of vaccine production from WHO's publishing strains to product shipment. Single-use equipment will be used to allow maximization of production time and minimization of down-time in this process.

2.0 Introduction

Vaccines are an increasingly important cost-effective prophylactic measure against widespread disease, particularly for diseases of high morbidity or mortality or of pandemic proportions. Influenza is a virus that fits the latter category, for many of its strains have caused global pandemics and it recurs on a yearly basis. The entire population is at risk of contracting influenza, and it is especially virulent in children and the elderly, especially since it spreads as an aerosol. Influenza is responsible for about 17,000 to 51,000 deaths annually in the United States and global pandemic death tolls reach the millions (Kang).

Influenza is a lipid-encapsulated RNA virus consisting of four surface proteins essential for infection and replication: M1, M2, neuraminidase (NA) and hemagglutinin (HA). There exist two subclasses of influenza, A and B. Each year, the World Health Organization (WHO) issues a recommendation of the influenza A and B HA and NA variants most likely to cause disease. Classically, based on these recommendations, trivalent influenza vaccines have been produced in embryonated chicken eggs, consisting of two influenza A variants and a single influenza B variant, which are then activated and adjuvanted to increase the immune response. These vaccines are inefficient in children and the elderly, and antigenic drift can greatly decrease their efficacy in the rest of the population. Lately, egg shortages combined with increasingly virulent influenza strains (H1N1) have rendered this method of vaccine production archaic and inefficient for meeting the ever-increasing demand for yearly vaccination. A new method of vaccine production involving industrial cell culture would greatly increase the number of vaccines available.

Current influenza vaccines are either produced from inactivated egg-grown virus particles or from trivalent recombinant HA proteins (rHA) grown in mammalian cells (Flucelvax, approved November 2012). While the recombinant protein vaccine is egg-free, it requires expensive mammalian cell culture and yields a protein product that is not entirely in its native conformation. Recently, virus-like particles (VLPs) have become a popular alternative to traditional inactivated or recombinant protein vaccines such as the human papilloma virus (HPV) vaccine currently on the market. VLPs can display any protein of interest on their surface in the native conformation found on the mimicked virus. However, these VLPs do not contain the necessary components for replication or infection (see Figure 2.1), so serve as a method to safely introduce antigenic material to the body as if it were an active virus (D'Aoust).

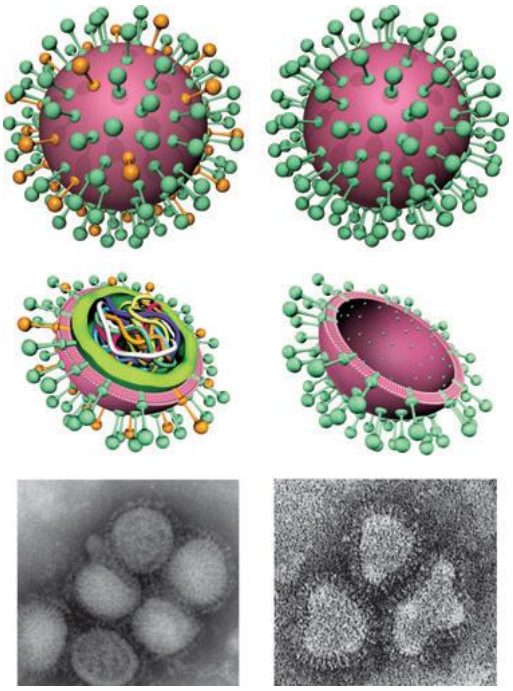

Figure 2.1 Virus particles(left) compared to VLPs (right). Note the missing genomic material in the VLPS as well as the simplified proteins in the membrane compared to the fully functional virus. The electron micrographs demonstrate their similarity in macrostructure. Reprinted from Landry, N. *PLoS One.*Volume 8, 2010.

VLPs present a much smaller chance of infection or side-effects when compared with the other vaccines available, and their immunogenic response is considerably more robust, on the order of a five-fold increase (Kushnir). Influenza is a lipid membrane-enclosed virus, obtaining this coating from the infected cell as it buds involving no internal protein capsid. This simplicity of viral structure allows for a simplified purification process, since it is considerably more thermodynamically stable than a VLP containing capsid proteins, keeping the downstream processing equipment similar to that used for rHA or inactivated virus vaccines (Roldao).

In the case of influenza VLPs, studies have demonstrated that the M1 matrix ion channel proteins in combination with HA are necessary and sufficient to induce VLP formation (Galarza). These VLPs tend to form with diameters between 80 and 120nm, about the same size as the influenza virus particles. Since these requirements for VLP budding are minimal, most of the protein production of the cells can be directed towards the production of HA rather than M1, such that the majority of the protein produced is HA on the surface of individual VLPs. The efficacy of vaccine is related to its ability to present HA in its native conformation to the immune system. The immunogenicity of VLPs is already about five-fold greater than that of rHA proteins or inactivated viruses. HA production will be dominant in the insect cells by insuring the upstream promoter is activated earlier in the life cycle of the virus than the promoter upstream of the M1 protein. Then, upon progression of the virus, HA will be considerably more concentrated than M1, creating VLPs densely populated with HA surface proteins for a more robust vaccine.

The baculovirus expression vector system consists of the infection of an insect cell line with the baculovirus, which is only virulent to insect cells. These baculoviruses are recombinant and contain a DNA that the host cell will produce. Upon infection the host insect cells will produce large amounts of protein encoded by the recombinant baculovirus DNA. These proteins, mostly HA and in much smaller quantities, a matrix protein, will induce the formation of VLPs at sites of aggregation near the insect cell membrane. This process will result in VLPs made of insect cell membrane with the desired antigenic material to immunize against influenza on the surface. The baculoviruses are consumed in the process of VLP formation. The design and execution of the baculovirus constructs for each HA subtype and the method of promoter selection to provide the correct relative amounts of HA and M1 production are outside of the scope of this project, but have been mentioned for completeness of theoretical design. Furthermore, the verification of VLP budding and the average concentration of HA on the surface of each VLP would be carried out on the bench-top using HA activity assays and electron microscopy to determine the exact characteristics of the influenza VLPs.

2.1 Project Charter

Project Name: Influenza Virus-Like Particle Vaccine Biopharmaceutical Process

Project Team: Erin Kinnevy, Ian Penkala, April Soohoo, John Vogel

Project Goal: Design a biopharmaceutical plant and process to produce egg-free influenza vaccines

Project Scope:

In-Scope

- Observe cGMP in producing influenza vaccines, obeying all safety and health regulations
- Design the production stream from small scale fermentation to final product purification
- Design both a pilot- and a manufacturing-scale plant
- Deliver a product from R&D to final production in under six months
- Maintain a profit margin
- Price the vaccine competitively with egg-based vaccines
- Create an animal-free influenza vaccine

Out-of-Scope

- Baculovirus research and formulation
- Influenza strain research
- Toxicology studies
- Proof-of-Concept studies
- Clinical trials
- Product packaging & distribution
- Cell-line screening and testing
- Air flow profiles of facility

Deliverables

- Production timeline & individual batch timeline
- Achievement of regulatory requirements
- Technical feasibility assessment & supporting literature
- Business feasibility assessment & cost sensitivity analysis
- WHO vaccine guideline fulfillment

2.2 Innovation Map

Overall, the production of a non-egg based influenza vaccine is innovative, as it is a relatively new to the market. In regards to the production facility, the upstream process's innovations are specific to the single-use, stirred-tank bioreactors, and choice of other single-use technologies.

The downstream process follows the same path as traditional influenza vaccines, and thus the only innovation is the use of disposable technology as opposed to stainless steel equipment. As a result, an innovation map for the downstream process has not been included; the single-use technology innovations have the same advantages as in the upstream process.

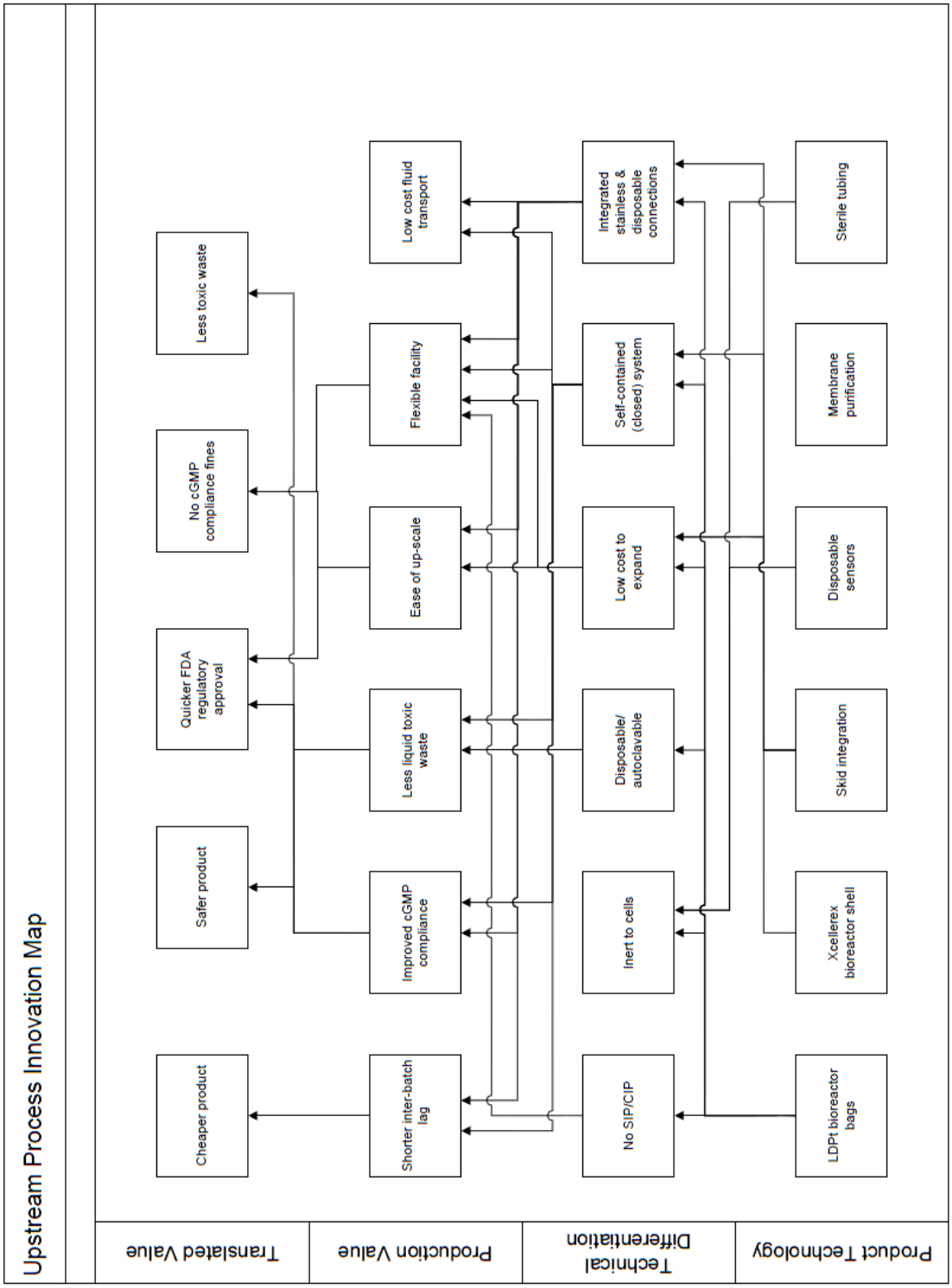

Figure 2.2 Upstream Process Innovation Map. The innovation map identifies key features of the upstream process for the non-egg based influenza vaccine system based on the process design and equipment choice.

2.3 Expression System Selection

A major focus of biopharmaceutical companies is to develop new technologies as alternatives to egg-based culture for production of viral vaccine antigens. Alternatives currently under development involve direct expression of selected viral antigens in mammalian cells, insect cells, plant cells, and avian cells. For the purposes of this design project, all of these alternatives were explored for their potential to overcome both the safety and efficacy limitations of egg-based vaccine production.

The mammalian cell lines under investigation included Madin-Darby Canine Kidney (MDCK) cells, Vero cells, and PERC6 cells. While these cell lines have been associated with high-titer productivity of influenza strains, few studies have reported on large-scale production. Other possible limitations involved with mammalian cell lines include the difficulty in selecting defined cell lines with the ability to propagate in a chemically defined medium under serum-free conditions and the vigorous testing required for clearance of adventitious or oncogenic agents (Montomoli). Plant cell lines and prokaryotic cell lines were eliminated based on the difficulties involving land and transportation routes, separations, and protein folding (D'Aoust).

Avian and insect cell lines showed the most benefits with high suspension growth, scalability, inexpensive growth conditions, and rapid turn-over rates. After analyzing the benefits and challenges associated with each of the alternatives, the insect cell line, SF^2, similar to the SF+ line developed by Protein Sciences™, was designed by the R&D group as the VLP production system. Rather than using a cell culture-based platform, hemagglutinin (HA), the active component of the influenza vaccine, will be produced using recombinant DNA methods and the baculovirus expression vector system (BEVS).

Table 2.1 shows several influenza vaccines that are in development by different biopharmaceutical companies (PCAST).

Table 2.1 Competing influenza vaccines made from non-egg based platforms that are currently in development, in clinical trials or on the market (PCAST).

Vaccine/Manufacturer	Type	Mode of Preparation	Adjuvant
FluBlok™/Protein Sciences	Soluble protein (HA), trivalent	Insect Cell Culture/Baculovirus	None
PanBlock/Protein Sciences	Soluble protein (HA)	Insect Cell Culture/Baculovirus	None
Influenza/Novavax	VLP	Insect Cell Culture/Baculovirus	None
Pandemic & Seasonal Influenza/Lentigen	VLP	Human Cell Culture/Lentivirus	None
Pandemic & Seasonal Influenza/Medicago	VLP	Plant Cell Culture	None
Pandemic & Seasonal Influenza/Vaxinnate	Soluble human and avian protein (HA)	E. Coli	Flagellin
Universal Influenza/Dynavax	Soluble protein	E. Coli	CpG

The insect cells will be cultured in bioreactors and infected with the recombinant baculovirus, which is then purified and formulated into a vaccine. The specific cell line to be used for the vaccine production is SF^2, a cell line derived from SF9 cells with a specific phenotype and genotype ideal for biomanufacturing. SF^2 cells have been proven to be non-tumorigenic, free of adventitious agents and retroviruses, and can remain stable for at least 50 passages, according to prior studies during the development phase of this cell line.

The BEVS platform offers several advantages over the other methods: (1) the recombinant HA is highly purified without egg derivatives, (2) the cloning, expression, and manufacturing of the recombinant HA is less time-consuming, (3) the production

system is highly scalable, (4) recombinant HA in insect cells has been tested in clinical trials with a positive safety record (McPherson).

2.4 Baculovirus Expression System

The baculovirus expression system (BEVS) has been chosen as the basis for the influenza vaccine production for its proven effectiveness in a variety of research applications. Baculovirus expression vectors have been used extensively for the production and characterization of virus-like particles (VLPs). The expression of baculovirus in insect cell cultures in particular represents a robust method for producing recombinant glycoproteins, and has been shown to be a reliable system for recombinant protein expression (Kushnir).

The pharmaceutical industry has shown that BEVS is an industrially relevant platform for the production of complex biologics. Vaccines such as GlaxoSmithKline's Cervarix™, a bivalent human papillomavirus vaccine was produced using the BEVS and was approved in 2009 for commercialization in the USA. Other candidate vaccines produced using the BEVS such as PanBlock™ and Novavax™ are in late-stage development, and one, FluBlok™, has been approved by the FDA. The biosafety of baculoviruses provide additional advantages to using this system. Baculoviruses are incapable of infecting mammals and plants and they have a restricted range of hosts that they can infect, which is typically restricted to a closely related insect species. The well-documented safety profile of this expression system has lead to its increasing use in the production of biologics and other research applications (Kost).

The expression system works by designing baculoviruses to display foreign peptides and proteins on virus particles. When using the BEVS for vaccine production, mathematical models are used to help predict optimal conditions, aid in the control and operation of the process and help to formulate novel hypotheses. The overall

development process is predominantly characterized by the cell growth period, which is followed by the addition of the virus. The cell growth period is typically modeled exponentially and constrained by either depletion of a limiting nutrient or by accumulation of toxic metabolic by-products. In the case of insect cells, however, no limiting nutrients or toxic metabolic by-products have currently been identified (Kost, Aucoin).

An additional concern when using the BEVS is the distribution of virus and quantification of baculovirus. The uptake of the virus once it is added to the system can have many important implications on further processing. For example, the amount of baculovirus added to the system can dramatically affect the production capacity of the system. However, the multiplicity of infection and the distribution between the insect cells in the population and the virus are aspects of this process that remain outside the scope of this design project.

3.0 Concept Stage

3.1 Total Market and Competitive Analysis

The company is targeting the annual production of seasonal influenza vaccines in the North American and European markets. In addition, the company must be able to respond to a pandemic. In 2004, the world market for influenza vaccines was $1,525 million in revenues, and in 2008, $3,400.1 million. Based on a compound annual growth rate of 14.0% from 2008-2013, it is projected that in 2013 the world market for influenza vaccines will reach $6,546 million in revenues (World Market), of which approximately two thirds, or $4,364 million can be estimated as part of the target markets.

Currently, the market is dominated by the production of influenza vaccines in an egg-based platform. However, this platform limits the population the vaccine is available to due to egg and feather allergies. In addition, this platform is also associated with long lead times, difficulties scaling up, and a less consistent, reproducible means of vaccine production, along with vulnerabilities from egg shortages from issues such as the avian flu. In particular, the egg-based platform struggles to create enough vaccines in a timely manner for a pandemic situation (Harding).

Vaccine companies are now branching out to produce flu vaccines using alternative expression systems from cell cultures in order to overcome these challenges. The FDA recently approved two seasonal flu vaccines produced from cell cultures- Flucelvax™, by Novartis™, produced from MDCK cells, in November 2012, and FluBlok™, by Protein Sciences™, produced from insect cells, in January 2013 (Willyard). With growing research in the field of cell culture vaccine production, the company must be able to compete with both these vaccines, as well as vaccines produced

from the egg-based platform. Influenza vaccines produced from cell cultures remains a largely new innovative field, which leaves room for this company to grow and expand into this market share. Furthermore, this company has the potential to expand into the market for other vaccines, since this method of production is also feasible system for other types of vaccines besides influenza.

3.2 Principal Competition Production Level and Sales

As a world-leading vaccine company, production must meet or exceed that of other major companies. Currently, Novartis™, Sanofi Pasteur™, AstraZeneca™, GSK™, and CSL™ are leaders in the flu vaccine market (Kresse). In 2011, Sanofi Pasteur™ produced over 200 million seasonal vaccine doses (Sanofi Pasteur fact sheet). Based on this number and annual growth of the market, it is estimated that the company will need to produce 100 million vaccine doses for the North American and European markets in 2013.

In response to the A(H1N1) 2009 pandemic, Sanofi Pasteur™ recorded the production of over 250 million vaccine doses (Sanofi Pasteur fact sheet). This number represents an estimated maximum production level this new platform must be able to meet. Overall, in order to remain competitive in the market, the company must be able to produce each flu vaccine at a cost of $1 per dose.

3.3 Customer Requirements

As an alternative to the egg-based flu vaccine, this new insect cell based flu vaccine must meet the same general customer requirements. These would include manufacturing protocols following FDA guidelines as well as FDA approval of the final flu vaccine product. In addition, the vaccine must also be stable, and either meet or exceed the industry standard for quality for a price similar to those of current competitive egg-based vaccine products.

3.4 Block Flow Diagram

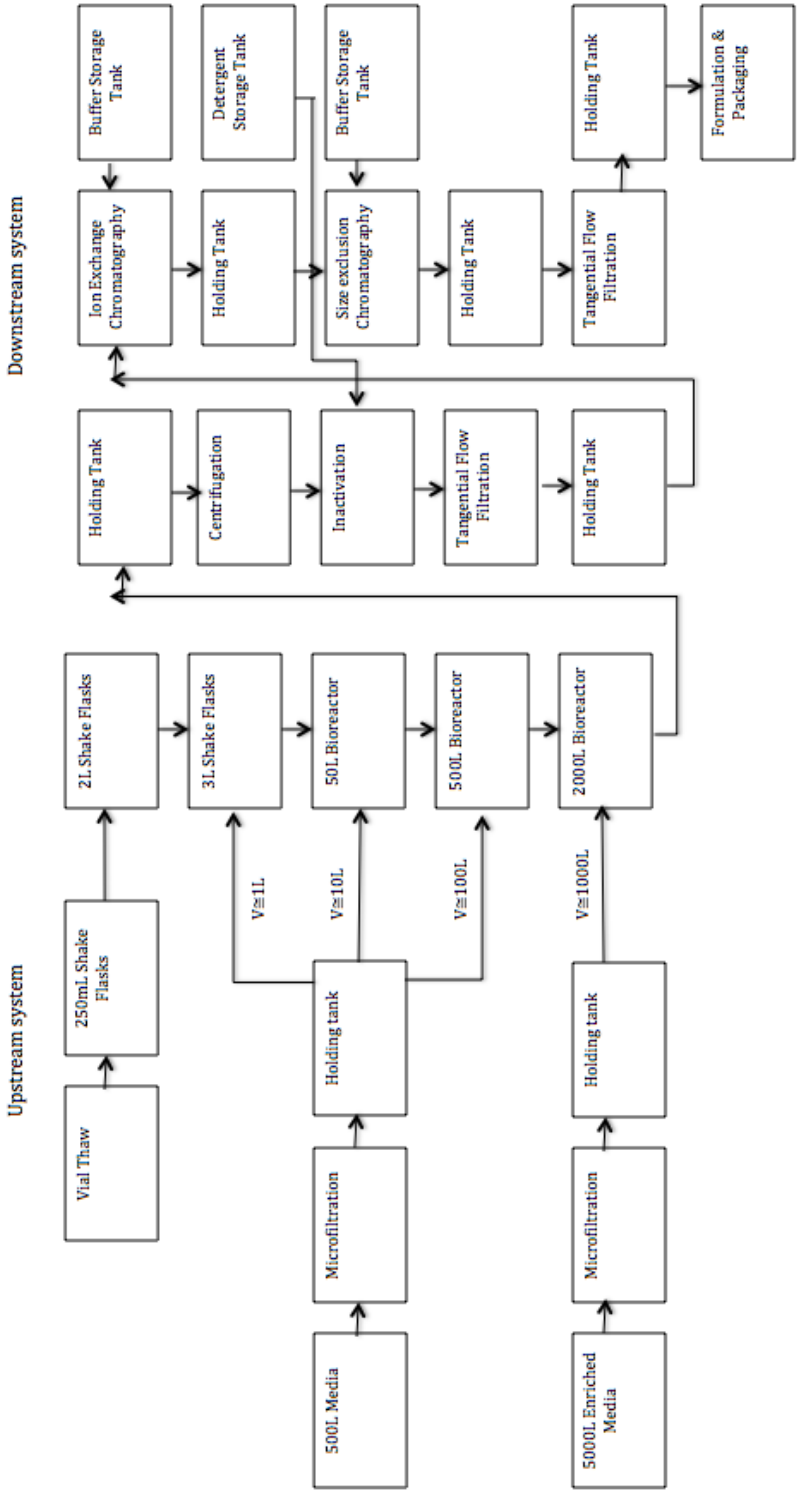

Figure 3.1 Block Flow Diagram. Outlines the process flow of the upstream and downstream systems. Note that three separate upstream and downstream process designs will operate in the facility to run each of the influenza strains.

4.0 Process Flow Diagrams

The following pages contain the process flow diagrams and material balances describing the manufacturing platform for the production of the non-egg based influenza vaccine. Although not shown in the block separate process flow diagrams, four lines will be included in the upstream and downstream processes. This is to ensure complete separation and purification of each of the viral strains to be included in the final product and a back-up line for the sake of a potential pandemic outbreak.

4.1 Upstream Process

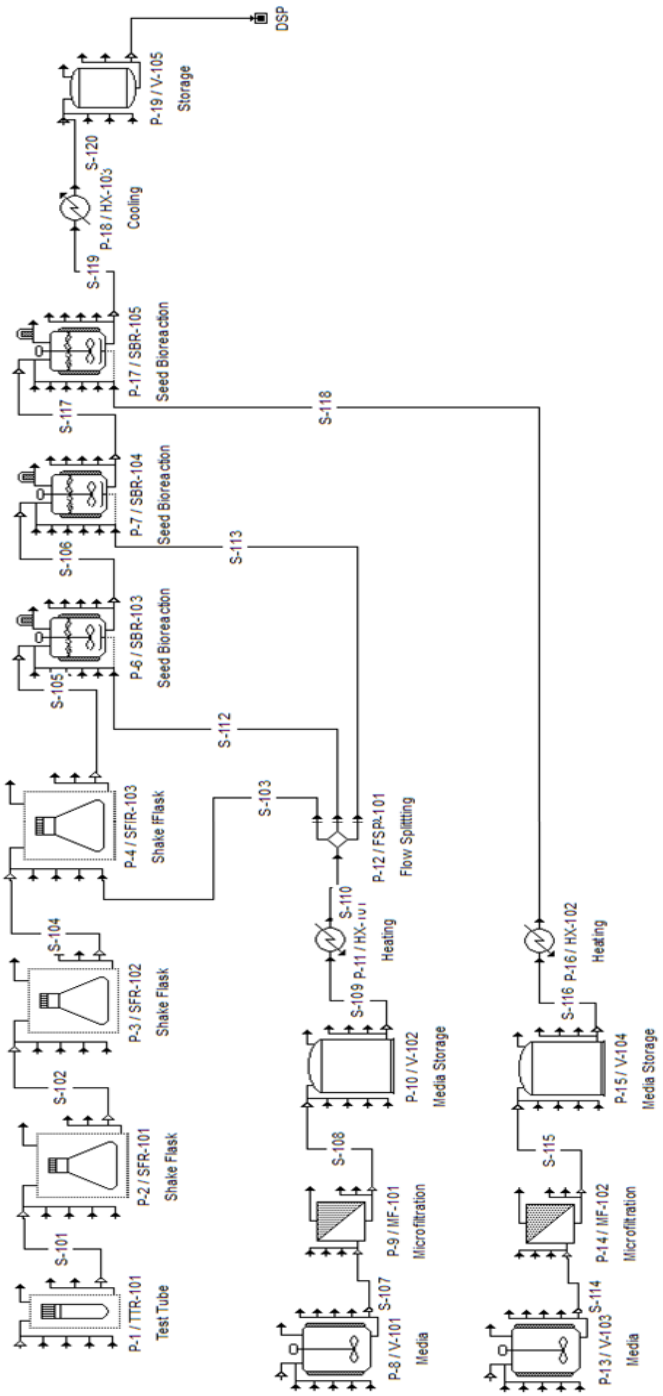

Figure 4.1 Upstream Process Diagram. Outlines the process flow of the upstream system using SuperPro Designer. Note that three separate upstream process designs will operate in the facility to run each of the influenza strains.

4.2 Downstream Process

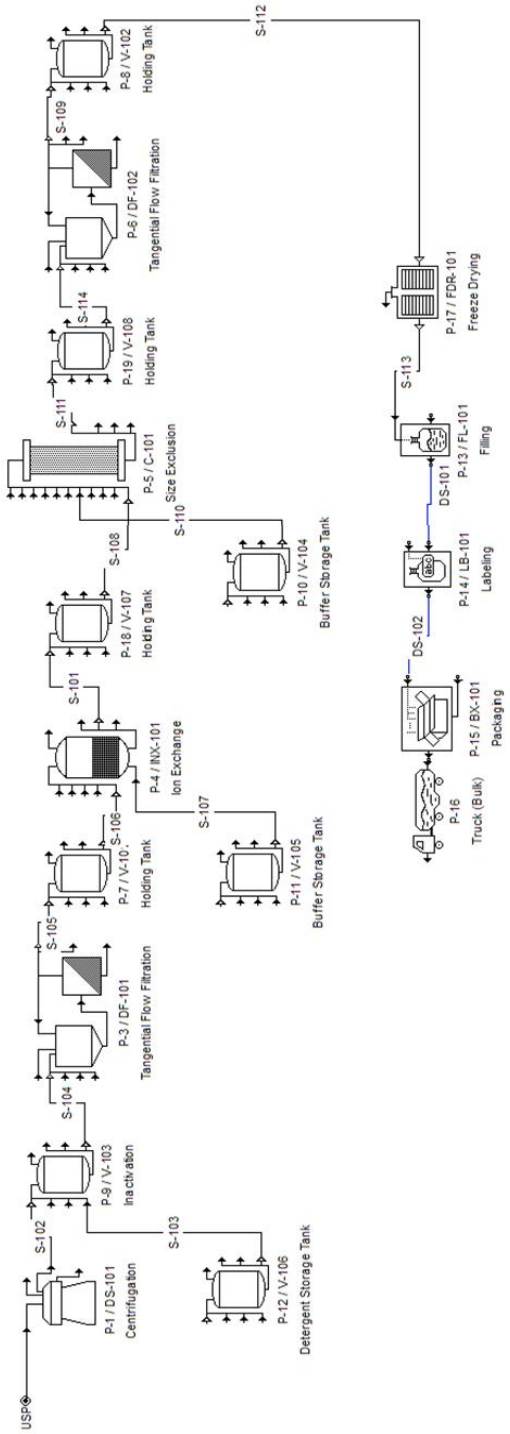

Figure 4.2 Downstream Process Diagram. Outlines the process flow of the downstream system using SuperPro Designer. Note that three separate downstream process designs will operate in the facility to run each of the influenza strains.

4.3 Overall Material Balance

Table 4.1 Overall Component Balance. Outlines initial values, final values, inputs, outputs, and change in values for each component in the overall system.

Overall Component Balance (kg/batch)					
Component	Input	Output	Produced	Consumed/Lost	Out-In
EXCELL Medium	102.71	34.51	0	68.20	0
Biomass	.0.0000126	12.60	12.60	0	0
VLP (3 strains)	0	0.42	0.60	0.18	0
Glucose	19.10	0	0	19.10	0
Pluronic F-68	3.3348	3.3348	0	0	0
Dry Air	13360.149	10554.52	0	2805.63	0
Sodium Bicarbonate	1.10	0	0	1.10	0
Triton X-100	10500	10500	0	0	0
TNBP	3150	3150	0	0	0
Water	3334.8	3334.8	0	0	0

4.4 Utility Requirements

(I)	Amount Per 3 Batches (Liters)	Number Sets of Batches	Total (L)	Cost (USD/L)		
Water (Low Endotoxin)	3334.8	6	20008.8	15.125		
(II)	Heat Exchanger Requirement (kg/sec)	Heat Exchanger Requirement (L/sec)	Operation Time (Seconds)	Number of Heat Exchangers	Total (L)	Cost (USD per foot cubed)
Water	0.88673809	0.88673809	15778800	9	125924966.8	0.03
(III)	Elucidation and Column Water (L per train)	Number of Downstream Trains	Number of Batches	Total (L)	Cost	
Water (Low Endotoxin)	20	3	6	360	15.125	
(III)	Amperage per Pump (Amperes)	Voltage per Pump (Volts)	Power Per Pump (kW)	Number of Pumps	Operation Time (Hrs)	Power Needed (kW-hr)
Electricity	6.5	115	0.7475	27	4383	88459.8975
(IV)	Estimated Additional Plant Electricity (kW-hr)	Estimated Plant Operation Electricity Cost				
Electricity	5547335.738	338387.48	(From Lang: 2% of Equipment Cost)			

Utility	Annual Requirement	Annual Cost (USD)
Water (L)	125924966.8	$133,410.07
Low Endotoxin Water (L)	20368.8	$308,078.10
Electricity (kW-hr)	5635795.635	$343,783.53

5.0 Process Descriptions

5.1 Upstream Process

The upstream process is used to culture SF^2 cells, and then infect the cells to produce VLPs. For each of the three influenza strains produced each year, a separate upstream process is run. The process begins with a vial thaw of $1.4x10^7$ cells, scaled up to $1.4x10^{13}$ cells with fermentation using a series of shake flasks and bioreactors. After cell growth is complete, cells are infected to produce VLPs before entering the downstream process for isolation and purification.

5.1.1 Shake Flasks (P-1/TTR-101, P-2/SFR-101, P-3/SFR-102)

The scaling of SF^2 cells begins in shake flasks sized at 250mL, 2L, and 3L. Shake flasks will have a working volume that is a fraction of the flask size (50mL, 250 mL, 1000mL respectively) and will be used to grow cells at a ten-fold for each scale-up. Each scaling will take 3.32 days.

5.1.2 Bioreactors

Following the use of the shake flasks, bioreactors will be used to continue the scale-up of the number of SF^2 cells for vaccine production. Each bioreactor will be filled to a particular working volume, and will be used to grow cells to a final a ten-fold concentration. For this growth rate, the time spent in each bioreactor is 3.32 days. The bag bioreactors will receive media in a fed-batch process while under constant monitoring and feedback control of temperature, pH, dissolved oxygen (DO), and biomass. In the final 2000L bioreactor in each upstream process train, a virus titer will be

added to each bioreactor in order to provide a multiplicity of infection (MOI) of one. This will insure that the maximum number of cells will be infected without causing excessive infection. The contents will continue to be fermented for three days to insure maximum VLP production then harvested and sent to the downstream process train.

5.1.3 Harvest Bags

Harvest bags will be used to line the bioreactors as part of the single-use technology implementation. The bags are fitted with ports and disposable probes for simple interfacing with the bioreactor shells. This technology will eliminate CIP, SIP, and WFI requirements in the upstream process, decreasing both costs and batch turnover time. The harvest bags come sterilie-wrapped and ready to line the bioreactors. The bags will be changed in between batches, and will be disposed as solid biohazard waste.

5.1.4 Media Prep

Dry media for SF^2 cells will be enriched with sodium bicarbonate to maintain pH and mixed with filtered air and sterile water before being fed to the bioreactors. The media comes enriched with appropriate amounts of glucose, glutamine, pyruvate, calcium, and Pluronic F-68 to reduce shear. The media will be diluted in a ratio of 30.8 grams of media to one liter of water. Media will be sterile filtered and warmed to 28ºC before addition to the flask or bioreactor.

5.1.5 Media Holding Bags

Media holding bags made of biologically inert low-density polyethylene (LDPE) will be used to line the holding totes in order to create a disposable process. This will eliminate CIP, SIP, and WFI requirements, thus decreasing costs and batch turnover time. These bags can be discarded in the solid biohazard waste stream and can be replaced within an hour. The bags will be pressurized slightly to maintain positive pressure, preventing contamination.

5.2 Downstream Process

The downstream process for the purification of influenza viruses includes clarification, concentration methods centered on diafiltration and centrifugation, chemical inactivation and treatment, further chromatography separations, and final polishing. Competing vaccine production companies generally require: whole virion inactivated cell culture-derived human influenza vaccines (1) 15 μg of HA per strain and dose, (2) total protein content no more than 100 μg of protein per virus strain and human dose, (3) bacterial endotoxins must be less than 25 IU per human dose, and (4) residual host cell DNA must be less than or equal to 10 ng per single human dose (Wolff).

5.2.1 Disk-Stack Centrifugation

To concentrate the influenza virus, high-speed centrifugation is used. Centrifugation is a preferred method for clarifying cell cultures from batch sizes of 2,000 L or larger. When a disk-stack centrifuge is used, cell debris in the centrifuge is minimized for better cell recovery and concentrate clarification (O'Brien).

5.2.2 Depth Filtration

Depth filtration is used to concentrate insoluble larger particles from the suspending medium. This process is conducted in two phases: first a filter with an open-pore structure removes cell debris, then a filter with a tighter pore structure removes colloidal matter. The disposable depth filtration system consists of a set of inlet and outlet single-use manifolds with vents and a flexible number of capsule filters placed between the manifolds. Permeate flux, transmembrane pressure, and pore size are important

parameters that influence process efficiency. To minimize losses, a pore diameter of 172 nm or less should be used for influenza A and B. An optimal pore size of 300 kDa and a wall shear rate of 5700 Hz have been previously identified for influenza strains. Under these conditions, virus losses based on HA activity were negligible (Vincente 2011), with total protein and host cell DNA reduction of 90% and 93% (Wolff 2008).

5.2.3 Virus Inactivation

To prohibit the advancement of untreated viral particles into the downstream purification process, any remaining baculovirus must undergo inactivation. Incubation for 30 minutes in 1% Triton X-100 and 0.3% tri(n-butyl)phosphate (TNBP) is sufficient to inactivate all remaining baculovirus particles in the fermentation broth. The filtrate will be transferred to a 1000L tank and charged with Triton X-100 and TNBP at 1% and 0.3% respectively post-mixing. Incubation at room temperature for 30 minutes will disrupt any remaining virus. This process can continue for several hours without damaging the VLPs at the detergent concentrations used (Rueda 2000, Pantua 2006)

5.2.4 Anion Exchange Chromatography

Ion exchange chromatography is a separation method, which relies on charge interactions between the virus particle and the charges on the chromatography resin. This step follows size exclusion chromatography to remove residual host cell DNA, protein contaminants, amino acids, and ions remaining from the fermentation reactions in a positive and negative mode. The detergents used to inactivate remaining baculovirus particles and inactivated baculovirus particles will also be removed during this

chromatography step. Influenza VLPs have an acidic pI of 5.0, making anionic exchange more favorable for this process. The Sepharose Q ion exchange matrix is used with a loading buffer conditioned with 0.65 M NaCl. The resin capacity can be improved with optimal loading and washing conditions, which have been found to be at a pH of 6.0 (Bernd, Kalfbuss, Wolff). This process will largely remove media components and host cell DNA.

5.2.5 Size Exclusion Chromatography

Size exclusion chromatography (SEC) is used to separate the virus particles from contaminating host cell proteins and nucleic acids as well as inactivated baculovirus particles. Sepharose chromatography with a fractionation range of 70-40,000 kDa typically leads to a viral recovery of approximately 38%. The combination of ultrafiltration with size-exclusion chromatography leads to an overall virus recovery of 36% with a protein and DNA reduction of 96% and 99%, respectively (Liu, Wolff).

5.2.6 Tangential Flow Filtration

Following the chromatography units, tangential flow filtration is carried out to further concentrate the VLPs. Tangential flow filtration with microfiltration membranes produces a clear stream that requires minimal filtration before loading on a column. The buffer composition for this process is composed of 137 mM sodium chloride, 2.7 mM potassium chloride, 1.5 mM potassium dihydrogen phosphate, and 10 mM sodium phosphate dibasic (2). In this type of filtration, the fluid is pumped tangentially along the surface of the membrane and an applied pressure serves to force a portion of the fluid

through the membrane to the filtrate side. Molecules that are too large to pass through the membrane pores are swept away by the tangential flow (T. Brien, L. Brown, D. Battersby et al.).

6.0 Major Unit Descriptions

6.1 Equipment Selection

The selection of insect cells for the process allows for the choice between stainless steel and disposable equipment based facilities. Traditionally, stainless steel facilities are used for vaccine production, however currently there is a greater push in the industry to move towards disposable facilities, particularly in the areas of contract development and manufacturing.

With these two types of equipment sets available, there are three options that may be used moving forward for a commercial manufacturing facility. The first option uses traditional stainless steel equipment, which requires both SIP and CIP accommodations. The second option utilizes all disposable technologies, and the third option uses a combination of both traditional and disposable equipment.

Traditional facilities are advantageous in that large companies most commonly use them, and thus are already approved by regulatory agencies. In addition, the stainless steel equipment provides barriers for pathogens from the environment. The traditional facilities also are more environmentally friendly than disposable systems, since there would be less solid wastes and plastic accumulation (Mauter).

However, despite challenges that arise from using innovative technology such as disposable systems, disposable facilities offer several advantages. For example, disposable equipment provides several areas for cost savings, including initial equipment capital, process footprint, plant design costs, and removing the requirement for costly and timely CIP and SIP processes. In addition, disposable facilities increase efficiency of production by reducing process turnaround time and increasing safety in product

changeover by eliminating cross-contamination and easing site-to-site transfer of materials (Whitford, Eibl). Despite rises in environmental impact from solid wastes from disposable equipment, these systems offer the advantage of decreasing the use of environmentally toxic cleaning agents and a lesser need for water treatments (Mauter). The single use equipment comes sterilized and will be replaced for each batch, thus eliminating exhaustive cleaning and validation procedures.

Disposable systems are a newer technology and the industry is still cautious about them. At the present time, disposable equipment has scalability limitations with an upper limit of a 2000L vessel. However, for this company's facility this proves to be irrelevant. Another major concern with the use of disposable equipment is the potential of extractables and leachables into the vaccine development process. Currently, there is a greater push for regulations and guidelines to minimize potential problems (Martin).

An in depth economic analysis was completed to further compare the different types of facilities. Based on a quantitative analysis comparing single-use disposable technology versus traditional stainless steel vessels for a monoclonal antibody process on a 2000L fermentation scale from 2012 (Sinclair, Monge). This study estimates the investment cost of the disposable facility at approximately $25.6 million versus a stainless steel facility at approximately $32.5 million. The difference in cost is largely due to the removal of costly procedures such as CIP and SIP. Using a 7-year MACRS table, these estimations were used as total depreciable capital. Profits were estimated based on production of 100 million doses, priced at $8.12 each, for a total profit of $1.2 billion each year. After depreciation, profits, interest rates, and tax rates are taken into account, the present value of the disposable facility is found to cost approximately $21.2

million, while the present value of the traditional facility is found to be $26.9 million (see Appendix A). Based on this the cost analysis and other benefits such as increased efficiency and faster batch turn around, a single-use disposable facility was chosen for the company's vaccine production.

6.2 Upstream Process

6.2.1 Shake Flasks (P-2/SFR-101, P-3/SFR-102, P-4/SFR-103)

Polycarbonate flasks (250mL, 2L, 3L) will be purchased from Corning for growing SF^2 cell in suspension culture, passaging cell lines, and seeding the 50L bioreactor. These flasks are gamma-irradiation sterilized and individually packaged to ensure no culture contamination. The lids are filter-vented to insure sterility and prevent contamination while allowing adequate gas exchange. They will be incubated in shaking incubators at 28°C at 90rpm. These flasks will be manipulated within a biosafety cabinet and are disposable in the biohazard waste stream.

6.2.2 Aseptic Transfer Equipment (S-101, S-102, S-104)

As shown in the process flowsheet, the streams labeled as S-101, S-102, and S-104 will be used Biosafe® Aseptic Transfer Equipment for transferring the material from the shake flasks. The equipment will be supplied from Sartorius Stedim with the purchase of storage tanks and bags. The aseptic transfer ports offer reliable and easy-to-use solutions for secure transfer of fluids. They are cost effective and have enhanced sterility assurance. All materials are compliant with 21 CFR Part 177.2600, 21 CFR Part 177.1630, and CFR Part 177.2470. The recommended temperature range for this equipment is 5-30ºC, which is compliant with the 28ºC temperature associated with the insect cell culture and processing. The materials of construction are stainless steel AISI 316 L, PETP, and silicone/EPDM for the gaskets.

6.2.3 Main Bioreactors (P-6/SFR-103, P-7/SFR-104, P-17/SFR-105)

The 50L, 500L, and 2000L bioreactors are the Xcellerex model from GE Life Sciences, and are sized at maximum capacity to enable room for larger culture sizes and future scale-up. The minimum working volumes are 20% of the maximum working volumes: 10L, 100L, and 400L respectively. The reactors are placed in series from 50L to 2000L, with each reactor's final product seeding the next reactor after three days of fermentation. These reactors are outfitted for disposable operation such that only the plastic liners need to be replaced between batches, cutting the time required between batch operations to just under one hour. This disposable technology also eliminates the necessity of both SIP and CIP procedures.

These reactors are outfitted with 2 pH probes, 2 DO probes, three pumps, an integrated electrical safety circuit, temperature control hardware, a sparger, and an agitator.

The disposable culture bags have an inert USP Class VI low-density polyethylene culture contact surface, a disposable pressure sensor, four Brooks mass flow controllers, complementary tubing, multiple culture access ports, filtered gas lines, multiple supply ports, and an agitation system. The agitation system consists of a high-density polyethylene impeller mounted at the bottom with a set of microporous stainless steel disks. Control of the system is based on the Rockwell/Allen Bradley Controller with Wonderware HMI. The controller allows for a closed loop monitoring and control of agitation, gas mixing, liquid agitation & removal, pH, weight, sparging, gas overlay, temperature, and DO. The control system also features real-time data collection, reporting, and trending, using PID control to aggressively maintain steady-state

conditions. The reactors will be purchased from GE at $213,519, $233,717, and $930,446, respectively.

In the last bioreactor in the upstream process, the cells will be infected at the beginning of day 2 after beginning fermentation in the vessel. This will be preformed under aseptic conditions with a high-titer virus stock developed and prepared by R&D. This stock will contain the baculoviruses necessary for the infected cells to produce VLPs with the correct HA surface protein. The cells will be infected at a MOI of one to insure adequate infection: not many cells will survive the lytic VLP production process, and there will be no excess of virus remaining post-production. This MOI allows simple and efficient deactivation of the virus and separation of the few remaining host cells while providing a maximum number of active VLPs.

6.2.4 Pump (S-105, S-106)

The pumps connecting the final shake flask in the line to the first bioreactor and the first bioreactor to the 500 L bioreactor will be purchased from Cole-Palmer ™ for $4,640. Cole-Palmer ™ provides peristaltic pumps for large-scale biopharmaceutical processes to ensure sterility and a high degree of precision. The Masterflex® B/T® (12-321 rpm, 115 V) with variable-speed wash-down will be used to transfer the cell broth to the bioreactors. This model includes a new Rapid-Load pump head for fast and easy tubing changes. The Masterflex® B/T® is suitable for high-flow bulk-transfer and the gentle peristaltic action is ideal for pumping shear sensitive fluids.

6.2.5 Harvest Bags

Harvest bags are fitted to particular bioreactors, and thus will be purchased alongside each bioreactor from the same manufacturer. From Xcellerex, 50L, 500L, and 2000L fully-integrated XDR bioreactor bags will be purchased for $447 each. These harvest bags are of USP Class VI, and have a LDPE fluid contact layer. The bags are also gamma irradiated, and follow validation guides. Each bag includes C-flex tubing, aspetic connectors, multiple feed/addition lines, a harvest line, filters (exhaust, sparge, overlay), a pressure sensor, sampling and probe ports, a thermowell, and a proprietary XDR impeller/sparge system.

6.2.6 Pumps (S-103, S-112, S-113)

The pumps connecting the media holding tank to the 3L shake flask and 50L and 200L bioreactors will be purchased from Cole-Palmer ™ for $4,640. Cole-Palmer ™ provides peristaltic pumps for large-scale biopharmaceutical processes to ensure sterility and a high degree of precision. The Masterflex® B/T® (12-321 rpm, 115 V) with variable-speed wash-down will be used to transfer the material from the 500 L media tank to the shake flasks and reactors. This model includes a new Rapid-Load pump head for fast and easy tubing changes. The Masterflex® B/T® is suitable for high-flow bulk-transfer and the gentle peristaltic action is ideal for pumping shear sensitive fluids.

6.2.7 Media Holding Bags

Flexel® bags from Sartorious will be purchased with the plastic holding tanks for a combined cost of $1,682 or $2,915, depending on the volume. These are single use

bags designed for processing, mixing, storage, and transport of large volume of biopharmaceutical solutions. After use, the media holding bags will be disposed as solid biohazard waste.

6.2.8 500 L Holding Tanks (P-8/V-101, P-10/V-102)

For media and intermediate cell culture storage, the Plastic Palletank® from Sartorious will be used. For the first line, transferring media to the Shake Flask, and first two bioreactors, a 500 L storage tank will be purchased for $2,915. This tank is designed for storage and processing of biopharmaceutical fluids, and can be used for both media storage and bulk intermediate hold in the upstream process. They are designed to be lined with Flexel® 3D bags, and meet in-process and storage requirements while minimizing required floor space in a plant.

6.2.9 Pump (S-107, S-108, S-114, S-115)

The pump connecting media to the filtration unit will be purchased from Cole-Palmer™ for $4,640. Cole-Palmer™ provides peristaltic pumps for large-scale biopharmaceutical processes to ensure sterility and a high degree of precision. The Masterflex® B/T® (12-321 rpm, 115 V) with variable-speed wash-down will be used to transfer the material from the media tank to the filtration unit. This model includes a new Rapid-Load pump head for fast and easy tubing changes. The Masterflex® B/T® is suitable for high-flow bulk-transfer and the gentle peristaltic action is ideal for pumping shear sensitive fluids.

6.2.10 Sterile Filtration (P-9/MF-101, P-14/MF-102)

Sterile filtration is a further clarification step that will be used for reactor medium. The upstream process will consist of two media storage tanks per line, one for media transferred to the final shake flask and first two bioreactors in series, and the second for media transferred to the production bioreactor.

The filtration system is made of cellulose fibers that are designed to trap submicron particles in their crevices. The Encapsulated Zeta Plus (EZP) System will be purchased from 3M Purification Inc. for $9,000.

This is a single-use system designed for production scale biomanufacturing, which consists of a filter holder, top and bottom manifolds and capsules. The EZP system features ergonomically designed holders that can pivot for easy loading and unloading, and a translucent plastic shell for convenient liquid level detection. The large holder (model 16EZB) accommodates up to 17.5 m^2 of filter media and has the capability of processing up to 5000 L of liquid. The system requires the Zeta Plus EXT filter media (Zeta Plus 60SP02A), which is available in a single-use format (EZP Data Sheet).

6.2.11 3000 L Holding Tanks (P-13/V-103, P-15/V-104)

For media and intermediate cell culture storage before transfer to the 2000 L Bioreactor, the Palletank® In-Process Fluid Handling Tank from Sartorious Stedim will be used. This tank is designed for storage and processing of biopharmaceutical fluids, and can be used for both media storage and bulk intermediate hold in the upstream process. They are designed to be lined with Flexel® 3D bags, and meet in-process and storage requirements while minimizing required floor space in a plant.

6.2.12 Heat Exchanger (P-11/HX-101, P-16/HX-102)

For warming the medium prior to tank charging and cooling of the fermentation broth to prepare for downstream processing, it will be necessary to add heat to the liquid media streams through cGMP certified heat exchanger units. These units will operate such that the contents remain sterile throughout the heat transfer process and will be optimized to handle the maximum flow rates from the pump units. The heat exchangers were designed by our team and the unit most closely resembling our heat transfer area calculations will be purchased from Enerquip for this purpose.

6.2.13 Cooler (P-18/HX-103)

A cooler is necessary to chill the jackets of medium storage tanks and to chill the fermentation broth after completion of the upstream process. It will function as a refrigeration unit that sends coolant through pipes leading to vessel jackets. This system will allow the process to be flexible in terms of cooling requirements in case of added load or added storage vessels during periods of high demand.

6.3 Downstream Process

After the upstream process is complete, the medium will be aseptically transferred to a different location for the downstream purification. This will be done through a single-use transfer system with presterilized connectors and tubing. In addition to faster production, this system eliminates time that would be spent on CIP and SIP and reduces the risk of cross contamination.

6.3.1 Disk-Stack Centrifuge (P-1/DS-101)

Centrifugation with disk-stack bowls is used as the first step in the downstream processing. This method is preferred in biopharmaceutical processing for clarifying cell cultures from batch sizes larger than 2000 L. The harvested fluid and cultivation broth are clarified with low-speed centrifugation and the virus is later purified in an ultracentrifugation step. The virus solution is centrifuged through a sucrose gradient, which generally ranges from 20-60%, with the target virus at 40-45% sucrose.

The Carr® UniFuge® Pilot from Carr Centritech Separation Systems is purchased for $400,000 and can be readily connected to the plant's other single-use bioreactor connections. This single-use disposable module is designed for gentle harvesting of shear-sensitive biological materials. Due to its single-use feature, this centrifugation system has no CIP or SIP requirements. The UniFuge® module is completely automated with flexible cycle parameter entry so that once the module has filled with cells, the controllers stops the rotor and discharges. The machine operating conditions include a feed flow range of 0.1-4 liters per minute and a bowl capacity of 1.6 liters (UniFuge® Data Sheet).

6.3.2 Pump (S-102)

The pump connecting the centrifuge to the virus inactivator tank will be purchased from Cole-Palmer™ for $4,640. Cole-Palmer™ provides peristaltic pumps for large-scale biopharmaceutical processes to ensure sterility and a high degree of precision. The Masterflex® B/T® (12-321 rpm, 115 V) with variable-speed wash-down will be used to transfer the material from the centrifuge to the inactivator. This model includes a new Rapid-Load pump head for fast and easy tubing changes. The Masterflex® B/T® is suitable for high-flow bulk-transfer and the gentle peristaltic action is ideal for pumping shear sensitive fluids.

6.3.3 Detergent Storage Tank (P-12/V-106)

The detergent for viral inactivation will be stored in the Plastic Palletank® from Sartorius Stedim for $1,682. This storage tank is a single-use piece of equipment to ensure process and user safety. Sartorius Stedim provides these single-use platforms for lower initial investment, process optimization, and faster time to market. The Palletank® is available in volumes of 200L and 500L and must be used with the Flexel® 3D Bags.

6.3.4 Pump (S-103)

The pump connecting the storage tank to the virus inactivator tank will be purchased from Cole-Palmer™ for $4,640. Cole-Palmer™ provides peristaltic pumps for large-scale biopharmaceutical processes to ensure sterility and a high degree of precision. The Masterflex® B/T® (12-321 rpm, 115 V) with variable-speed wash-down will be used to transfer the material from the storage tank to the inactivator. This model includes

a new Rapid-Load pump head for fast and easy tubing changes. The Masterflex® B/T® is suitable for high-flow bulk-transfer and the gentle peristaltic action is ideal for pumping shear sensitive fluids.

6.3.5 Virus Inactivation Tank (P-9/V-103)

To prohibit the advancement of untreated viral particles into the downstream purification process, any remaining baculovirus must undergo inactivation. Incubation for 30 minutes in 1% Triton X-100 and 0.3% tri(n-butyl)phosphate (TNBP) is sufficient to inactivate all remaining baculovirus particles in the fermentation broth. The filtrate will be transferred to a 1000L tank and charged with Triton X-100 and TNBP to final volume percentages of 1% and 0.3% respectively. Incubation at room temperature for 30 minutes will disrupt any remaining baculovirus particles. This process can continue for several hours without damaging the VLPs at the detergent concentrations used (Rueda 2000, Pantua 2006). The vessels will be purchased from Sartorius Stedim at a cost of $1,682.

6.3.6 Pump (S-104)

The pump connecting the virus inactivator tank to the depth filtration device will be purchased from Cole-Palmer™ for $4,640. Cole-Palmer™ provides peristaltic pumps for large-scale biopharmaceutical processes to ensure sterility and a high degree of precision. The Masterflex® B/T® (12-321 rpm, 115 V) with variable-speed wash-down will be used to transfer the material from the inactivator tank to the filtration device. This model includes a new Rapid-Load pump head for fast and easy tubing changes. The

Masterflex® B/T® is suitable for high-flow bulk-transfer and the gentle peristaltic action is ideal for pumping shear sensitive fluids.

6.3.7 Depth Filtration (P-3/DF-101)

Depth filtration is a further clarification step that follows the initial disk-stack centrifugation in downstream processing. The depth filtration system is made of cellulose fibers that are designed to trap submicron particles in their crevices. The Encapsulated Zeta Plus (EZP) System will be purchased from 3M Purification Inc. for $9,000.

This is a single-use system designed for production scale biomanufacturing, which consists of a filter holder, top and bottom manifolds and capsules. The EZP system features ergonomically designed holders that can pivot for easy loading and unloading, and a translucent plastic shell for convenient liquid level detection. The large holder (model 16EZB) accommodates up to 17.5 m^2 of filter media and has the capability of processing up to 5000 L of liquid. The system requires the Zeta Plus EXT filter media (Zeta Plus 60SP02A), which is available in a single-use format.

6.3.8 Pump (S-105)

The pump connecting the depth filter to the holding tank will be purchased from Cole-Palmer™ for $4,640. Cole-Palmer™ provides peristaltic pumps for large-scale biopharmaceutical processes to ensure sterility and a high degree of precision. The Masterflex® B/T® (12-321 rpm, 115 V) with variable-speed wash-down will be used to transfer the material from depth filter to the holding tank. This model includes a new Rapid-Load pump head for fast and easy tubing changes. The Masterflex® B/T® is

suitable for high-flow bulk-transfer and the gentle peristaltic action is ideal for pumping shear sensitive fluids.

6.3.9 Depth Filtration Holding Tank (P-7/V-101)

The fluid from the depth filtration unit will be stored in the Plastic Palletank® from Sartorius Stedim for $1,682. This storage tank is a single-use piece of equipment to ensure process and user safety. Sartorius Stedim provides these single-use platforms for lower initial investment, process optimization, and faster time to market. The Palletank® is available in volumes of 200L and 500L and must be used with the Flexel® 3D Bags.

6.3.10 Pump (S-106)

The pump connecting the holding tank to the ion exchange chromatography column will be purchased from Cole-Palmer™ for $4,640. Cole-Palmer™ provides peristaltic pumps for large-scale biopharmaceutical processes to ensure sterility and a high degree of precision. The Masterflex® B/T® (12-321 rpm, 115 V) with variable-speed wash-down will be used to transfer the material from the holding tank to the ion exchange chromatography column. This model includes a new Rapid-Load pump head for fast and easy tubing changes. The Masterflex® B/T® is suitable for high-flow bulk-transfer and the gentle peristaltic action is ideal for pumping shear sensitive fluids.

6.3.11 Chromatography Resin Storage Tank (P-11/V-105)

The chromatography resin for the first line of ion exchange chromatography columns will be stored in the Plastic Palletank® from Sartorius Stedim for $1,682. This storage tank is a single-use piece of equipment to ensure process and user safety. Sartorius Stedim provides these single-use platforms for lower initial investment, process optimization, and faster time to market. The Palletank® is available in volumes of 200L and 500L and must be used with the Flexel® 3D Bags.

6.3.12 Pump (S-107)

The pump connecting the chromatography resin tank to the ion exchange chromatography column will be purchased from Cole-Palmer™ for $4,640. Cole-Palmer™ provides peristaltic pumps for large-scale biopharmaceutical processes to ensure sterility and a high degree of precision. The Masterflex® B/T® (12-321 rpm, 115 V) with variable-speed wash-down will be used to transfer the resin material from its tank to the chromatography column. This model includes a new Rapid-Load pump head for fast and easy tubing changes. The Masterflex® B/T® is suitable for high-flow bulk-transfer and the gentle peristaltic action is ideal for pumping shear sensitive fluids.

6.3.13 Anion Exchange Chromatography Column (P-4/INX-101)

Ion exchange chromatography is used for further purification and separation of the product. Ion exchange chromatography uses the principle of binding based on charge differences between the resin and the product. The ReadyToProcess Q Sepharose FF chromatography column from GE Life Sciences will be used for this process and

purchased for $166,000. This system is designed for scale-up and production of biopharmaceuticals and is part of GE's single-use, disposable platform. These columns are closed units and the design allows easy disposal after completion. The system includes a column tube, lids, support nets, support screens, stream stoppers, hose connections, welding tubing, filter holders, media packing valves, a hose for the inlet tubing, O-rings, and TC gaskets. The column hardware and components are made from polypropylene, polyetheretherketone, Tygon 2275 Polyolefin, Fluorocarbon rubber, and Ethylenpropylenediene. The column has a bed volume of 2.5 L, with a minimum liquid temperature of 4ºC and a maximum pressure of 1.2 bar (17 psi).

The column is pre-packed with bioprocess medium. Capto Q is a strong anion exchanger, and is resistant to chemical agents used in recovery. This media allows for fast mass transfer and is intended for capture and intermediate large-scale purification. The Capto Q media must be stored in 20% ethanol, at a pH between 2 and 12, and at a temperature between 4ºC and 30ºC. The filtrate containing the VLPs will be sent through the column at 300cm/h flow rate, and the column will be primed to bind DNA and any remaining baculovirus after the inactivation step while allowing the VLPs to flow through the column with less of an ionic affinity (GE Data sheet). The column will then be eluted into the waste stream and reset for the next batch. This column will remove the remaining medium components not filtered out during the filtration step or consumed during the fermentation reaction. The column run time is about 20 minutes per VLP strain batch based on size and flow rate calculations from column size and flow rate data shown on the process specification page.

6.3.14 Pump (S-108)

The pump connecting the ion exchange chromatography product to the holding tank will be purchased from Cole-Palmer™ for $4,640. Cole-Palmer™ provides peristaltic pumps for large-scale biopharmaceutical processes to ensure sterility and a high degree of precision. The Masterflex® B/T® (12-321 rpm, 115 V) with variable-speed wash-down will be used to transfer the product from the first chromatography column to the holding tank. This model includes a new Rapid-Load pump head for fast and easy tubing changes. The Masterflex® B/T® is suitable for high-flow bulk-transfer and the gentle peristaltic action is ideal for pumping shear sensitive fluids.

6.3.15 Ion Exchange Holding Tank (Sartorius Stedim, P-18/V-107)

The remaining product from the first line of chromatography columns will be stored in the Plastic Palletank® from Sartorius Stedim for $1,682. This storage tank is a single-use piece of equipment to ensure process and user safety. Sartorius Stedim provides these single-use platforms for lower initial investment, process optimization, and faster time to market. The Palletank® is available in volumes of 200L and 500L and must be used with the Flexel® 3D Bags.

6.3.16 Pump (S-101)

The pump connecting the holding tank to the size exclusion chromatography column will be purchased from Cole-Palmer™ for $4,640. Cole-Palmer™ provides peristaltic pumps for large-scale biopharmaceutical processes to ensure sterility and a high degree of precision. The Masterflex® B/T® (12-321 rpm, 115 V) with variable-

speed wash-down will be used to transfer the material from the holding tank to the second chromatography column. This model includes a new Rapid-Load pump head for fast and easy tubing changes. The Masterflex® B/T® is suitable for high-flow bulk-transfer and the gentle peristaltic action is ideal for pumping shear sensitive fluids.

6.3.17 Chromatography Resin Storage Tank (Sartorius Stedim, P-10/V-104)

The chromatography resin for the second line of chromatography columns will be stored in the Plastic Palletank® from Sartorius Stedim for $1,682. This storage tank is a single-use piece of equipment to ensure process and user safety. Sartorius Stedim provides these single-use platforms for lower initial investment, process optimization, and faster time to market. The Palletank® is available in volumes of 200L and 500L and must be used with the Flexel® 3D Bags.

6.3.18 Pump (S-110)

The pump connecting the chromatography resin tank to the size exclusion chromatography column will be purchased from Cole-Palmer™ for $4,640. Cole-Palmer™ provides peristaltic pumps for large-scale biopharmaceutical processes to ensure sterility and a high degree of precision. The Masterflex® B/T® (12-321 rpm, 115 V) with variable-speed wash-down will be used to transfer the resin from the holding tank to the column. This model includes a new Rapid-Load pump head for fast and easy tubing changes. The Masterflex® B/T® is suitable for high-flow bulk-transfer and the gentle peristaltic action is ideal for pumping shear sensitive fluids.

6.3.19 Size Exclusion Chromatography Column (P-5/C-101)

Chromatography is performed to bind and elute host cell impurities. The ReadyToProcess platform from GE Life Sciences is used for its single-use features and large-scale purification capabilities. Benefits of this column include quick start-up times and fast on-site maintenance without special tools or trained personnel. The system will be purchased for $166,000.

The Capto Core 700 chromatography resin from GE Life Sciences will be used for this process. Capto Core 700 was recommended for its design, which focuses on intermediate purification and polishing of viruses. Capto Core 700 offers many performance advantages over typical gel filtration, which often causes a bottleneck in processing due to low flow rates and limited sample loads. Capto Core 700 is designed for high capacity, high flow velocities, and a high number of operational cycles. Capto Core 700 is composed of an inactive shell of highly cross-linked agarose, which excludes large molecules with a molecular weight cut off of 700 kDA. The inner core is ligand activated, hydrophobic and positively charged to induce binding of viral contaminants. The HA molecules on the VLP coat will prevent strong affinity for the column core, as described in the equipment test presented on the equipment data sheet. The column run time is about 40 minutes under average flow rate conditions but will be optimized to elute VLPs on a laboratory scale prior to manufacturing scale production.

6.3.20 Pump (S-111)

The pump connecting the size exclusion chromatography column to the holding tank will be purchased from Cole-Palmer™ for $4,640. Cole-Palmer™ provides

peristaltic pumps for large-scale biopharmaceutical processes to ensure sterility and a high degree of precision. The Masterflex® B/T® (12-321 rpm, 115 V) with variable-speed wash-down will be used to transfer the product from the column to the holding tank. This model includes a new Rapid-Load pump head for fast and easy tubing changes. The Masterflex® B/T® is suitable for high-flow bulk-transfer and the gentle peristaltic action is ideal for pumping shear sensitive fluids.

6.3.21 Size Exclusion Holding Tank (Sartorius Stedim, P-19/V-108)

The product from the second line of chromatography columns will be stored in the Plastic Palletank® from Sartorius Stedim for $1,682. This storage tank is a single-use piece of equipment to ensure process and user safety. Sartorius Stedim provides these single-use platforms for lower initial investment, process optimization, and faster time to market. The Palletank® is available in volumes of 200L and 500L and must be used with the Flexel® 3D Bags.

6.3.22 Pump (S-114)

The pump connecting the holding tank to the tangential flow filtration device will be purchased from Cole-Palmer™ for $4,640. Cole-Palmer™ provides peristaltic pumps for large-scale biopharmaceutical processes to ensure sterility and a high degree of precision. The Masterflex® B/T® (12-321 rpm, 115 V) with variable-speed wash-down will be used to transfer the material from the holding tank to the TFF device. This model includes a new Rapid-Load pump head for fast and easy tubing changes. The

Masterflex® B/T® is suitable for high-flow bulk-transfer and the gentle peristaltic action is ideal for pumping shear sensitive fluids.

6.3.23 Tangential Flow Filtration (P-6/DF-102)

Tangential flow filtration, also referred to as cross-flow filtration, with microfiltration membranes is used to clarify the culture broth. A major advantage of this process is that it requires minimal filtration before loading on a column. The Pellicon XL50 series from Millipore is purchased for $200,000. The system is capable of processing batch sizes of 1 to 10,000 liters of feed material. The Pellicon XL50 system is composed of a positive displacement type pump for low shear operation, pressure sensors, temperature sensors, and magnetic flowmeters on feed. The filtration tank has a total volume of 890 L and a working volume of 600 L (Pellicon XL50 Data sheet). The filtration will be used to reduce the water in the downstream process from 1000 L to 20 L, which will simplify and economize downstream processing. This unit operation will also reduce the mass of remaining medium components from the fermentation reactions based on the amount of water lost. The concentration of these ions will be the same on both sides of the membrane, so a reduction of water from 1000 L to 200 L will result in a loss of 80% of the medium components considered to be contaminants in the downstream process.

6.3.24 Pump (S-109)

The pump connecting the tangential flow filtration tank to the holding tank will be purchased from Cole-Palmer™ for $4,640. Cole-Palmer™ provides peristaltic pumps for

large-scale biopharmaceutical processes to ensure sterility and a high degree of precision. The Masterflex® B/T® (12-321 rpm, 115 V) with variable-speed wash-down will be used to transfer the material from the filtration tank to the holding tank. This model includes a new Rapid-Load pump head for fast and easy tubing changes. The Masterflex® B/T® is suitable for high-flow bulk-transfer and the gentle peristaltic action is ideal for pumping shear sensitive fluids.

6.3.25 Tangential Flow Filtration Holding Tank (P-8/V-102)

The product from the tangential flow filtration unit will be stored in the Plastic Palletank® from Sartorius Stedim for $1,682. This storage tank is a single-use piece of equipment to ensure process and user safety. Sartorius Stedim provides these single-use platforms for lower initial investment, process optimization, and faster time to market. The Palletank® is available in volumes of 200L and 500L and must be used with the Flexel® 3D Bags.

6.3.26 Pump (S-112)

The pump connecting the holding tank to the freeze dryer will be purchased from Cole-Palmer™ for $4,640. Cole-Palmer™ provides peristaltic pumps for large-scale biopharmaceutical processes to ensure sterility and a high degree of precision. The Masterflex® B/T® (12-321 rpm, 115 V) with variable-speed wash-down will be used to transfer the material from the holding tank to the freeze dryer. This model includes a new Rapid-Load pump head for fast and easy tubing changes. The Masterflex® B/T® is

suitable for high-flow bulk-transfer and the gentle peristaltic action is ideal for pumping shear sensitive fluids.

6.3.27 Pump (S-113)

The pump connecting the product from the freeze dryer to the filler will be purchased from Cole-Palmer™ for $4,640. Cole-Palmer™ provides peristaltic pumps for large-scale biopharmaceutical processes to ensure sterility and a high degree of precision. The Masterflex® B/T® (12-321 rpm, 115 V) with variable-speed wash-down will be used to transfer the material from the freeze dryer to the filler. This model includes a new Rapid-Load pump head for fast and easy tubing changes. The Masterflex® B/T® is suitable for high-flow bulk-transfer and the gentle peristaltic action is ideal for pumping shear sensitive fluids.

7.0 Additional Equipment/Processes

7.1 Formulation & Final Packaging

Once the Active Pharmaceutical Ingredient has been obtained through downstream processing, the formulation procedure will be taken care of by another facility to prepare the product for the domestic market. The product will be shipped to a Formulation, Filling, and Packaging group where the secondary process parameters will be performed.

7.2 Filter Integrity Tester

Filters are used for sterilization of process components, specifically media ingredients, so it is imperative that these filters work properly to prevent adventitious agents from forming in the many fermentation stages. The integrity tester from Sartorius is compatible with the Sartorius filters used in this process. The filter tester is automated and simple to use. The filters are tested before installation into the process in the inter-batch phase of operation. This tester is required per regulatory requirements and to insure cGMP operating conditions.

7.3 Tube Fusers/Tube Sealers

The sterile tube fuser is a fully automated device used to connect thermoplastic tubing in a sterile operation. The use of sterile tube fusing eliminates the need for a laminar flow cabinet. The tube fuser machine uses infrared technology along with disposable, single-use blades. The unit can connect large diameter tubing for easy transfer

of large volumes, and each fusing cycle is approximately two minutes. The tube fuser will be purchased from Sartorius Stedim for $15,300.

The tube sealer is used in conjunction with the tube fuser to seal bioprocess bags and bioreactors. The combined unit does not require compressed air or cooling water or any other additional accessories for operation. The tube sealer will be purchased from Sartorius Stedim for $10,200.

7.4 Biosafety Cabinet

Biosafety cabinets are essential for laboratory scale cell culture work to provide both sterility and workplace safety. They operate using sterile-filtered laminar air flow to prevent contamination and provide a clean workspace for cell manipulations. These will be essential for the small scale manipulations required for seeding the larger fermenters. Shake flasks will be manipulated within the biosafety cabinet, and samples will be removed from reactors and manipulated under the biosafety cabinets for cGMP compliance testing protocols. These cabinets will have an 8 in. sash and will contain all of the necessary equipment for cell culture manipulations. They will be purchased from and installed by Thermo Fisher Scientific.

7.5 Incubator

A shaking incubator kept at 28ºC is necessary for optimum cell growth while in shake flasks. The incubator will remain sterile and have copper surfaces to prevent microbial and fungal growth and will have a self-autoclaving feature. The incubator will be used to grow cells in all stages of shake-flask culture and will operate at 90rpm.

7.6 Cryopreservation Bank

A cryopreservation bank will be used for storage of the insect cell culture. Due to pre-existent cell culture lines within the facility, the -80ºC and ultra-low -160ºC freezers from Panasonic will already be provided in the manufacturing plant. Equipment and protocols for cell preservation will be followed according to Sigma-Aldrich's *Cell Culture Laboratory Handbook*-2nd Edition.

8.0 Unit Specification Sheets

The following pages contain the unit specification sheets for the equipment used in this vaccine manufacturing facility. Equipment models and prices have been obtained through contact with vendors, from equipment lists from CDI Engineering Group, or from sources such as BioProcess International and BioPharm International.

8.1 Upstream Section

250 mL Shake Flask (P-2/SFR-101)

Function:	First phase of cell growth in 50 mL from storage in liquid nitrogen	
Vendor:	Corning	
Operation:	Batch	
Materials Handled:	Input	Quantity
	Medium	3.08 g
	Biomass	0.042 g
	Water	100 g
	Total	103.1 g
Characteristics:	Model:	250mL Polycarbonate Erlenmeyer Flask with Vent Cap
	Material:	Polycarbonate
	Flask Type:	Sterile
	Working Volume:	50 mL
	Total Volume:	250 mL
	Sterilization:	Single use
Operating Conditions:	Temp:	28°C
	Pressure:	1 atm
	Speed:	90 rpm
	pH:	6.2
Purchase Cost:	$595.89	(50 flasks)

2 L Shake Flask (P-3/SFR-102)

Function:	Second phase of cell growth to increase biomass, 250 mL working volume	
Vendor:	Corning	
Operation:	Batch	
Materials Handled:	Input	Quantity
	Medium	7.7 g
	Biomass	0.42 g
	Water	250 g
	Total	258.1 g
Characteristics:	Model:	2L Polycarbonate Erlenmeyer Flask with Vent Cap
	Material:	Polycarbonate
	Flask Type:	Sterile
	Working Volume:	0.25 L
	Total Volume:	2 L
	Sterilization:	Single use
Operating Conditions:	Temp:	28°C
	Pressure:	1 atm
	Speed:	90 rpm
	pH:	6.2
Purchase Cost:	$204.55	(6 flasks)

3L Shake Flask (P-2/SFR-101)

Function:	Third phase of biomass production, 2 L working volume	
Vendor:	Corning	
Operation:	Batch	
Materials Handled:	Input	Quantity
	Medium	61.6 g
	Biomass	4.2 g
	Water	2000 g
	Total	2065.8 g
Characteristics:	Model:	3L Polycarbonate Erlenmeyer (Fernbach Design) Flask with Vent Cap
	Material:	Polycarbonate
	Flask Type:	Sterile
	Working Volume:	2 L
	Total Volume:	3 L
	Sterilization:	Single use
Operating Conditions:	Temp:	28°C
	Pressure:	1 atm
	Speed:	90 rpm
	pH:	6.2
Purchase Cost:	$236.60	(4 flasks)

Pump (S-105)

Function:	To transfer material to the first bioreactor	
Vendor:	Cole-Palmer	
Operation:	Batch	
Materials Handled:	Input	Quantity
	Medium	308 g
	Biomass	4.2 g
	Water	10000.00 g
	Total	10312.2 g
Characteristics:	Model:	Masterflex® B/T ®
	Pump Type:	Peristaltic
	Flow Rate:	42 L/min
	Power:	6.5 Amps
Operating Conditions:	Temp:	28°C
	Pressure:	1 atm
Purchase Cost:	$4,640.00	

50 L Bioreactor (P-6/SBR-103)

Function:	Fourth phase of biomass production, 10 L working volume	
Vendor:	GE Life Sciences	
Operation:	Batch	
Materials Handled:	Input	Quantity
	Medium	308 g
	Biomass	42 g
	Water	10000.00 g
	Total	10350 g
Characteristics:	Working Volume:	10 L
	Total Volume:	50 L
	Sterilization:	Single use bags
Operating Conditions:	Temp:	28°C
	Pressure:	1.1 atm
	pH:	6.2
	Sparging:	0.3 L O_2 min^{-1}
	Controller:	Rockwell/Wonderware
	Agitation:	90 rpm
Purchase Cost:	$213,519.00	(includes shell, control components, 3 pumps)

Pump (S-106)

Function:	To transfer material from the first bioreactor to the second bioreactor	
Vendor:	Cole-Palmer	
Operation:	Batch	
Materials Handled:	Input	Quantity
	Medium	308 g
	Biomass	4.2 g
	Water	10000.00 g
	Total	10312.2 g
Characteristics:	Model:	Masterflex® B/T ®
	Pump Type:	Peristaltic
	Flow Rate:	42 L/min
	Power:	6.5 Amps
Operating Conditions:	Temp:	28°C
	Pressure:	1 atm
Purchase Cost:	$4,640.00	

500 L Bioreactor (P-7/SBR-104)

Function:	Fifth phase of biomass production, 100 L working volume	
Vendor:	GE Life Sciences	
Operation:	Batch	
Materials Handled:	Input	Quantity
	Medium	3080 g
	Biomass	420 g
	Water	100000.00 g
	Total	103500 g
Characteristics:	Working Volume:	100 L
	Total Volume:	500 L
	Sterilization:	Single use bags
Operating Conditions:	Temp:	28°C
	Pressure:	1.1 atm
	pH:	6.2
	Sparging:	0.3 L O_2 min^{-1}
	Controller:	Rockwell/Wonderware
	Agitation:	90 rpm
Purchase Cost:	$233,717.00	(includes shell, control components, 3 pumps)

Pump (S-117)

Function:	To transfer material from the second bioreactor to the third bioreactor	
Vendor:	Cole-Palmer	
Operation:	Batch	
Materials Handled:	Input	Quantity
	Medium	3080 g
	Biomass	42 g
	Water	100000 g
	Total	103122 g
Characteristics:	Model:	Masterflex® B/T ®
	Pump Type:	Peristaltic
	Flow Rate:	42 L/min
	Power:	6.5 Amps
	Sterilization:	SIP/CIP
Operating Conditions:	Temp:	28°C
	Pressure:	1 atm
Purchase Cost:	$4,640.00	

2000 L Bioreactor (P-7/SBR-104)

Function:	Fifth phase of biomass production, 100 L working volume	
Vendor:	GE Life Sciences	
Operation:	Batch	
Materials Handled:	Input	Quantity
	Medium	30800 g
	Biomass	4200 g
	Water	1000000 g
	Total	1035000 g
Characteristics:	Working Volume:	1000 L
	Total Volume:	2000 L
	Sterilization:	Single use bags
Operating Conditions:	Temp:	28°C
	Pressure:	1.1 atm
	pH:	6.2
	Sparging:	0.3 L O_2 min^{-1}
	Controller:	Rockwell/Wonderware
	Agitation:	90 rpm
Purchase Cost:	$930,466.00	(includes shell, control components, 3 pumps)

Pump (S-119)

Function:	To transfer material from the third bioreactor to the cooling unit	
Vendor:	Cole-Palmer	
Operation:	Batch	
Materials Handled:	Input	Quantity
	Medium	30800 g
	Biomass	4200 g
	Water	1000000 g
	Total	1035000 g
Characteristics:	Model:	Masterflex® B/T ®
	Pump Type:	Peristaltic
	Flow Rate:	42 L/min
	Power:	6.5 Amps
Operating Conditions:	Temp:	28°C
	Pressure:	1 atm
Purchase Cost:	$4,640.00	

Pump (S-103)

Function:	To transfer material from the media storage tank to the 3 L flask	
Vendor:	Cole-Palmer	
Operation:	Batch	
Materials Handled:	Input	Quantity
	Media	138.6 g
	Water	4500 g
	Total	4638.6 g
Characteristics:	Model:	Masterflex® B/T ®
	Pump Type:	Peristaltic
	Flow Rate:	42 L/min
	Power:	6.5 Amps
Operating Conditions:	Temp:	28°C
	Pressure:	1 atm
Purchase Cost:	$4,640.00	

Media Storage Tank (P-8/V-101)

Function:	To hold media for the filtration unit	
Vendor:	Sartorius Stedim	
Operation:	Batch	
Materials Handled:	Input	Quantity
	Water	100000 g
	Media	3080 g
	Total	103080 g
Characteristics:	Model:	Flexel 3D Palletank
	Working Volume:	100 L
	Total Volume:	200 L
	Sterilization:	Single use bags
Operating Conditions:	Temp:	28°C
	Pressure:	1 atm
Purchase Cost:	$1,682.00	(includes shell, control components, 3 pumps)

Media Storage Tank (P-13/V-103)

Function:	To hold media for the filtration unit	
Vendor:	Sartorius Stedim	
Operation:	Batch	
Materials Handled:	Input	Quantity
	Filtration Media	4.5 L
	Total	4.5 L
Characteristics:	Model:	Flexel 3D Palletank
	Working Volume:	100 L
	Total Volume:	200 L
	Sterilization:	Single use bags
Operating Conditions:	Temp:	28°C
	Pressure:	1 atm
Purchase Cost:	$1,682.00	(includes shell, control components, 3 pumps)

Media Storage Tank (P-10/V-102)

Function:	To store media from the filtration unit and supply to shake flask and bioreactors	
Vendor:	Sartorius Stedim	
Operation:	Batch	
Materials Handled:	Input	Quantity
	Water	1112000 g
	Media	34250 g
	Total	1146250 g
Characteristics:	Model:	Flexel 3D Palletank
	Working Volume:	100 L
	Total Volume:	500 L
	Sterilization:	Single use bags
Operating Conditions:	Temp:	28°C
	Pressure:	1 atm
Purchase Cost:	$2,915.00	(includes shell, control components, 3 pumps)

Final USP Storage Tank (P-19/V-105)

Function:	To hold the product from the 2000 L bioreactor and transfer to downstream process (centrifugation unit)	
Vendor:	Sartorius Stedim	
Operation:	Batch	
Materials Handled:	Input	Quantity
	Medium	30800 g
	Biomass	4200 g
	Water	1000000 g
	Total	1035000 g
Characteristics:	Model:	Flexel 3D Palletank
	Total Volume:	2000 L
	Sterilization:	Single use bags
Operating Conditions:	Temp:	28°C
	Pressure:	1.1 atm
Purchase Cost:	$2,915.00	(includes shell, control components, 3 pumps)

Pump (S-118)

Function:	To transfer material from the heat exchanger to third bioreactor	
Vendor:	Cole-Palmer	
Operation:	Batch	
Materials Handled:	Input	Quantity
	Water	1110000 g
	Media	34188 g
	Total	1144188 g
Characteristics:	Model:	Masterflex® B/T ®
	Pump Type:	Peristaltic
	Flow Rate:	42 L/min
	Power:	6.5 Amps
Operating Conditions:	Temp:	28°C
	Pressure:	1 atm
Purchase Cost:	$4,640.00	

Pump (S-116)

Function:	To transfer material from the media storage tank to the heat exchanger	
Vendor:	Cole-Palmer	
Operation:	Batch	
Materials Handled:	Input	Quantity
	Water	1110000 g
	Media	34188 g
	Total	1144188 g
Characteristics:	Model:	Masterflex® B/T ®
	Pump Type:	Peristaltic
	Flow Rate:	42 L/min
	Power:	6.5 Amps
Operating Conditions:	Temp:	28°C
	Pressure:	1 atm
Purchase Cost:	$4,640.00	

Pump (S-115)

Function:	To transfer material from the filtration unit to the storage tank	
Vendor:	Cole-Palmer	
Operation:	Batch	
Materials Handled:	Input	Quantity
	Media	15400 g
	Water	500000 g
	Total	515400 g
Characteristics:	Model:	Masterflex® B/T ®
	Pump Type:	Peristaltic
	Flow Rate:	42 L/min
	Power:	6.5 Amps
Operating Conditions:	Temp:	28°C
	Pressure:	1 atm
Purchase Cost:	$4,640.00	

Pump (S-114)

Function:	To transfer material from the media storage tank to the filtration unit	
Vendor:	Cole-Palmer	
Operation:	Batch	
Materials Handled:	Input	Quantity
	Media	15400 g
	Water	500000 g
	Total	515400 g
Characteristics:	Model:	Masterflex® B/T ®
	Pump Type:	Peristaltic
	Flow Rate:	42 L/min
	Power:	6.5 Amps
Operating Conditions:	Temp:	28°C
	Pressure:	1 atm
Purchase Cost:	$4,640.00	

Pump (S-107)

Function:	To transfer material from the media storage tank to the 3 L flask	
Vendor:	Cole-Palmer	
Operation:	Batch	
Materials Handled:	Input	Quantity
	Media	3080 g
	Water	100000 g
	Total	103080 g
Characteristics:	Model:	Masterflex® B/T ®
	Pump Type:	Peristaltic
	Flow Rate:	42 L/min
	Power:	6.5 Amps
Operating Conditions:	Temp:	28°C
	Pressure:	1 atm
Purchase Cost:	$4,640.00	

Pump (S-108)

Function:	To transfer material from the filtration unit to the media storage tank	
Vendor:	Cole-Palmer	
Operation:	Batch	
Materials Handled:	Input	Quantity
	Media	3080 g
	Water	100000 g
	Total	103080 g
Characteristics:	Model:	Masterflex® B/T ®
	Pump Type:	Peristaltic
	Flow Rate:	42 L/min
	Power:	6.5 Amps
Operating Conditions:	Temp:	28°C
	Pressure:	1 atm
Purchase Cost:	$4,640.00	

Pump (S-109)

Function:	To transfer material from the media storage tank to the heat exchanger	
Vendor:	Cole-Palmer	
Operation:	Batch	
Materials Handled:	Input	Quantity
	Media	3080 g
	Water	100000 g
	Total	103080 g
Characteristics:	Model:	Masterflex® B/T ®
	Pump Type:	Peristaltic
	Flow Rate:	42 L/min
	Power:	6.5 Amps
Operating Conditions:	Temp:	28°C
	Pressure:	1 atm
Purchase Cost:	$4,640.00	

Pump (S-113)

Function:	To transfer filtered media to the second bioreactor	
Vendor:	Cole-Palmer	
Operation:	Batch	
Materials Handled:	Input	Quantity
	Media	3080 g
	Water	100000 g
	Total	103080 g
Characteristics:	Model:	Masterflex® B/T ®
	Pump Type:	Peristaltic
	Flow Rate:	42 L/min
	Power:	6.5 Amps
Operating Conditions:	Temp:	28°C
	Pressure:	1 atm
Purchase Cost:	$4,640.00	

Pump (S-112)

Function:	To transfer filtered media to the first bioreactor	
Vendor:	Cole-Palmer	
Operation:	Batch	
Materials Handled:	Input	Quantity
	Media	308 g
	Water	10000 g
	Total	10308 g
Characteristics:	Model:	Masterflex® B/T ®
	Pump Type:	Peristaltic
	Flow Rate:	42 L/min
	Power:	6.5 Amps
Operating Conditions:	Temp:	28°C
	Pressure:	1 atm
Purchase Cost:	$4,640.00	

Depth Filtration Unit (P-9/MF-101)

Function:	To sterilize media and remove bacteria from stream before entering bioreactors	
Vendor:	3M Purification, Inc.	
Operation:	Batch	
Materials Handled:	Input	Quantity
	Media	34266 g
	Water	1113000 g
	Total	1147266 g
Characteristics:	Model:	Encapsulated Zeta Plus
	Material:	Polycarbonate
		Silicone
		Polypropylene
		Thermoplastic Elastomer
		Nylon
	Filtration Area:	2.5 m^2
	Sterilization:	1 cycle autoclave (30 min @ 126°C)
	Size:	51”
	Additional Features:	Disposable/Single use
Operating Conditions:	Max Operating Temp:	40°C
	Max Operating Temp	3.1 bar (45 psi)
Purchase Cost:	$9,000.00	

Depth Filtration Unit (P-14/MF-102)

Function:	To sterilize media and remove bacteria from stream before entering bioreactors	
Vendor:	3M Purification, Inc.	
Operation:	Batch	
Materials Handled:	Input	Quantity
	Media	500 L
	Total	500 L
Characteristics:	Model:	Encapsulated Zeta Plus
	Material:	Polycarbonate
		Silicone
		Polypropylene
		Thermoplastic Elastomer
		Nylon
	Filtration Area:	2.5 m^2
	Sterilization:	1 cycle autoclave (30 min @ 126°C)
	Size:	51”
	Additional Features:	Disposable/Single use
Operating Conditions:	Max Operating Temp:	40°C
	Max Operating Pressure:	3.1 bar (45 psi)
Purchase Cost:	$9,000.00	

8.2 Downstream Section

Disc-Stack Centrifuge (P-1/DS-101)

Function:	To remove cells and biomass solids	
Vendor:	Carr Centritech Separation Systems	
Operation:	Continuous	
Materials Handled:	Input	Quantity
	Biomass	4200 g
	Water	1000000 g
	VLP	200 g
	Medium	30800 g
	Baculovirus	trace
	Total	1035200 g
Characteristics:	Model:	Unifuge(R)
	Material:	USP Class VI:
		Polycarbonate
		Polyurethane
		Silicone
		Bioprene
		C-Flex
		Polypropylene
	Feed Flow Range:	0.1-4 L/min
	Bowl Capacity:	1.6 L
	Additional Features:	Disposable/Single use
Operating Conditions:	Max Operating Temp:	100ºC
	Max Operating Pressure	N/A
Purchase Cost:	$400,000.00	

Pump (S-102)

Function:	To transfer material from centrifugation unit to inactivator tank	
Vendor:	Cole-Palmer	
Operation:	Batch	
Materials Handled:	Input	Quantity
	Biomass	0
	Water	990200 g
	Medium	30800 g
	Baculovirus	trace
	Total	1021000 g
Characteristics:	Model:	Masterflex® B/T ®
	Pump Type:	Peristaltic
	Flow Rate:	42 L/min
	Power:	6.5 Amps
Operating Conditions:	Temp:	22°C
	Pressure:	1.1 atm
Purchase Cost:	$4,640.00	

Detergent Storage Tank (P-12/V-106)

Function:	To hold the detergent for the virus inactivation process	
Vendor:	Sartorius Stedim	
Operation:	Batch	
Materials Handled:	Input	Quantity
	Water	200000 g
	TNBP	3150 g
	Triton X-100	10500 g
	Total	213650 g
Characteristics:	Material:	Stainless steel
	Working volume:	202.6 L
	Total volume:	500 L
	Sterilization:	SIP/CIP
Operating Conditions:	Temp:	22°C
	Pressure:	1.1 atm
Purchase Cost:	$1,682.00	(shell)

Pump (S-103)

Function:	To transfer material from centrifugation unit to inactivator tank	
Vendor:	Cole-Palmer	
Operation:	Batch	
Materials Handled:	Input	Quantity
	Biomass	0 g
	Water	990200 g
	VLP	200 g
	Medium	30800 g
	Baculovirus	Trace
	Total	1021200 g
Characteristics:	Model:	Masterflex® B/T ®
	Pump Type:	Peristaltic
	Flow Rate:	42 L/min
	Power:	6.5 Amps
Operating Conditions:	Temp:	22°C
	Pressure:	1.1 atm
Purchase Cost:	$4,640.00	

Virus Inactivation Tank (P-9/V-103)

Function:	To inactivate the virus	
Vendor:	Sartorius Stedim	
Operation:	Batch	
Materials Handled:	Input	Quantity
	Biomass	0 g
	Water	1100200 g
	TNBP	3150 g
	Medium	30800 g
	VLP	189 g
	Triton X-100	10500 g
	Baculovirus	Trace
	Total	1144839 g
Characteristics:	Material:	Stainless steel
	Total volume:	1100 L
	Sterilization:	SIP/CIP
Operating Conditions:	Temp:	22°C
	Pressure:	1.1 atm
Purchase Cost:	$1,682.00	(shell)

Pump (S-104)

Function:	To transfer material from inactivator tank to depth filter	
Vendor:	Cole-Palmer	
Operation:	Batch	
Materials Handled:	Input	Quantity
	Baculovirus	0 g
	Water	1100200 g
	TNBP	3150 g
	Medium	30800 g
	VLP	190 g
	Triton X-100	10500 g
	Total	1144840 g
Characteristics:	Model:	Masterflex® B/T ®
	Pump Type:	Peristaltic
	Flow Rate:	42 L/min
	Power:	6.5 Amps
Operating Conditions:	Temp:	22°C
	Pressure:	1.1 atm
Purchase Cost:	$4,640.00	

Depth Filtration Unit (P-3/DF-101)

Function:	To sterilize supernatant of centrifugation process and remove bacteria from stream	
Vendor:	3M Purification, Inc.	
Operation:	Batch	
Materials Handled:	Input	Quantity
	Media	30800 g
	Water	1100200 g
	Triton X-100	10500 g
	TNBP	3150 g
	VLP	190 g
	Baculovirus	Trace
	Total	114480 g
Characteristics:	Model:	Encapsulated Zeta Plus
	Material:	Polycarbonate Silicone Polypropylene Thermoplastic Elastomer Nylon
	Filtration Area:	2.5 m^2
	Sterilization:	1 cycle autoclave (30 min @ 126°C)
	Size:	51”
	Additional Features:	Disposable/Single use
Operating Conditions:	Max Operating Temp:	40°C
	Max Operating Pressure:	3.1 bar (45 psi)
Purchase Cost:	$9,000.00	

Pump (S-105)

Function:	To transfer material from filter to holding tank	
Vendor:	Cole-Palmer	
Operation:	Batch	
Materials Handled:	Input	Quantity
	Biomass	0 g
	Water	200000 g
	TNBP	573 g
	Media	5600 g
	VLP	190 g
	Triton X-100	1909 g
	Total	208272 g
Characteristics:	Model:	Masterflex® B/T ®
	Pump Type:	Peristaltic
	Flow Rate:	42 L/min
	Power:	6.5 Amps
Operating Conditions:	Temp:	22°C
	Pressure:	1.1 atm
Purchase Cost:	$4,640.00	

Depth Filtration Holding Tank (P-7/V-101)

Function:	To hold the purified product from the depth filtration device	
Vendor:	Sartorius Stedim	
Operation:	Batch	
Materials Handled:	Input	Quantity
	Water	200000 g
	TNBP	573 g
	Media	5600 g
	VLP	171 g
	Triton X-100	1909 g
	Total	208253 g
Characteristics:	Material:	Stainless steel
	Total Volume:	500 L
Operating Conditions:	Temp:	22°C
	Pressure:	1.1 atm
Purchase Cost:	$1,682.00	

Pump (S-106)

Function:	To transfer material from the holding tank to the IEX column	
Vendor:	Cole-Palmer	
Operation:	Batch	
Materials Handled:	Input	Quantity
	Biomass	0 g
	Water	200000 g
	TNBP	573 g
	Medium	5600 g
	VLP	171 g
	Triton X-100	1909 g
	Total	208253 g
Characteristics:	Model:	Masterflex® B/T ®
	Pump Type:	Peristaltic
	Flow Rate:	42 L/min
	Power:	6.5 Amps
Operating Conditions:	Temp:	22°C
	Pressure:	1.1 atm
Purchase Cost:	$4,640.00	

Chromatography Resin Tank (P-11/V-105)

Function:	To hold the IEX chromatography resin	
Vendor:	Sartorius Stedim	
Operation:	Batch	
Materials Handled:	Input	Quantity
	Capto Q Medium	50 L
Characteristics:	Material:	Stainless steel
	Total Volume:	50 L
	Sterilization:	Column CIP medium
Operating Conditions:	Temp:	22°C
	Pressure:	1.1 atm
Purchase Cost:	$1,682.00	

Pump (S-107)

Function:	To transfer material from the resin tank to the IEX column	
Vendor:	Cole-Palmer	
Operation:	Batch	
Materials Handled:	Input	Quantity
	Capto Q Medium	50 L
Characteristics:	Model:	Masterflex® B/T ®
	Pump Type:	Peristaltic
	Flow Rate:	42 L/min
	Power:	6.5 Amps
Operating Conditions:	Temp:	22°C
	Pressure:	1.1 atm
Purchase Cost:	$4,640.00	

Anion Exchange Chromatography Column (P-4/INX-101)

Function:	To specifically bind and elute the product in the anion exchange chromatography resin	
Vendor:	GE Life Sciences	
Operation:	Batch	
Materials Handled:	Input	Quantity
	Water	20000 g
	TNBP	573 g
	Medium	5600 g
	VLP	171 g
	Triton X-100	1909 g
	Total	28253 g
Characteristics:	Model:	ReadyToProcess Q Sepharose FF
	Material:	Stainless Steel 316 L, glass borosilicate
	Column Volume:	215.9844949 L
	Column Height:	0.4 m
	Column Diameter:	0.5 m
	Sterilization:	1 M NaOH, 30& isopropanol
Operating Conditions:	Minimum Temp:	4°C
	Maximum Pressure:	1.2 bar (17 psi)
	Bed Volume:	78.53981634 L
	Resin:	Capto Q
	Binding Capacity:	.22 mmol Cl^- /mL medium
	Flow Rate	0.981747704 LPM
	VLP Run Time	20.37183272 min
Purchase Cost:	$166,000.00	

Pump (S-101)

Function:	To transfer material from the IEX column to the holding tank	
Vendor:	Cole-Palmer	
Operation:	Batch	
Materials Handled:	Input	Quantity
	Water	20000
	TNBP	0
	Medium Components	0
	VLP	162
	Triton X-100	0
	Total	20162 g
Characteristics:	Model:	Masterflex® B/T ®
	Pump Type:	Peristaltic
	Flow Rate:	42 L/min
	Power:	6.5 Amps
Operating Conditions:	Temp:	22°C
	Pressure:	1.1 atm
Purchase Cost:	$4,640.00	

Ion Exchange Holding Tank (P-18/V-107)

Function:	To hold the purified product from the IEX column	
Vendor:	Sartorius Stedim	
Operation:	Batch	
Materials Handled:	Input	Quantity
	Water	20000 g
	Media	0 g
	VLP	162 g
	Total	20162 g
Characteristics:	Material:	Stainless steel
	Total Volume:	500 L
Operating Conditions:	Temp:	22°C
	Pressure:	1.1 atm
Purchase Cost:	$1,682.00	

Pump (S-108)

Function:	To transfer material from the holding tank to the SEC column	
Vendor:	Cole-Palmer	
Operation:	Batch	
Materials Handled:	Input	Quantity
	Water	20000 g
	Media	0 g
	VLP	162 g
	Total	20162 g
Characteristics:	Model:	Masterflex® B/T ®
	Pump Type:	Peristaltic
	Flow Rate:	42 L/min
	Power:	6.5 Amps
Operating Conditions:	Temp:	22°C
	Pressure:	1.1 atm
Purchase Cost:	$4,640.00	

Size Exclusion Chromatography Column (P-5/C-101)

Function:	To specifically bind and elute the product in the size-exclusion chromatography resin	
Vendor:	GE Life Sciences	
Operation:	Batch	
Materials Handled:	Input	Quantity
	Water	20000
	Media	0 g
	VLP	162 g
	Tris-HCl	4.8 g
	NaCl	14 g
	Total	20180.8 g
Characteristics:	Model:	ReadyToProcess Q Sepharose FF
	Material:	Stainless Steel 316 L, glass borosilicate
	Column Volume:	12.56637061 L
	Column Height:	0.4 m
	Column Diameter:	0.5 m
	Sterilization:	CIP buffer, 30% isopropanol in 1M NaOH
Operating Conditions:	Temp:	22°C
	pH:	7.5
	Resin:	Cross-linked agarose
	Flow Velocity	0.05 m/min
	Volume Medium	5 L
	Flow Rate	0.628318531 LPM
	Run Time	39.78873577 min
	Binding Capacity:	13 mg/mL medium
Purchase Cost:	$166,000.00	

Pump (S-111)

Function:	To transfer material from the SEC column to the holding tank	
Vendor:	Cole-Palmer	
Operation:	Batch	
Materials Handled:	Input	Quantity
	Water	20000 g
	Media	0 g
	VLP	154 g
	NaCl	14 g
	Tris-HCl	4.8 g
	Total	20172.8 g
Characteristics:	Model:	Masterflex® B/T ®
	Pump Type:	Peristaltic
	Flow Rate:	42 L/min
	Power:	6.5 Amps
Operating Conditions:	Temp:	22°C
	Pressure:	1.1 atm
Purchase Cost:	$4,640.00	

Size Exclusion Holding Tank (P-19/V-108)

Function:	To hold the purified product from the SEC column	
Vendor:	Sartorius Stedim	
Operation:	Batch	
Materials Handled:	Input	Quantity
	Water	20000 g
	Media	0 g
	VLP	154 g
	NaCl	14 g
	Tris-HCl	4.8 g
	Total	20172.8 g
Characteristics:	Material:	Stainless steel
	Total Volume:	500 L
Operating Conditions:	Temp:	22°C
	Pressure:	1.1 atm
Purchase Cost:	$1,682.00	

Pump (S-114)

Function:	To transfer material from the holding tank to the TFF unit	
Vendor:	Cole-Palmer	
Operation:	Batch	
Materials Handled:	Input	Quantity
	Water	20000 g
	Media	0 g
	VLP	154 g
	Total	26544.27 g
Characteristics:	Model:	Masterflex® B/T ®
	Pump Type:	Peristaltic
	Flow Rate:	42 L/min
	Power:	6.5 Amps
Operating Conditions:	Temp:	22°C
	Pressure:	1.1 atm
Purchase Cost:	$4,640.00	

Tangential Flow Filtration Unit (P-6/DF-102)

Function:	To filter product of size exclusion chromatography for any remaining contaminants and to insure small to no presence of detergents and media ions.	
Vendor:	Millipore	
Operation:	Continuous	
Materials Handled:	Input	Quantity
	Water	20000 g
	Media	0 g
	VLP	154 g
	Total	20146 g
Characteristics:	Model:	Encapsulated Zeta Plus
	Material:	304 L Stainless steel
		Polyethylene
		Nylon
		Polysulfone
		Silicone
	Flow Rate:	0.4-4 L/min
	Sterilization:	No CIP/SIP
	Surface area:	0.1-0.5 m^1
	Additional Features:	Disposable/Single use
Operating Conditions:	Max Operating Temp:	20-45°C
	Max Operating Pressure:	3.45 bar (50 psi)
Purchase Cost:	$200,000.00	

Pump (S-109)

Function:	To transfer material from the TFF unit to the holding tank	
Vendor:	Cole-Palmer	
Operation:	Batch	
Materials Handled:	Input	Quantity
	Water	10000 g
	Media	0 g
	VLP	146 g
	Total	10146 g
Characteristics:	Model:	Masterflex® B/T ®
	Pump Type:	Peristaltic
	Flow Rate:	42 L/min
	Power:	6.5 Amps
Operating Conditions:	Temp:	22°C
	Pressure:	1.1 atm
Purchase Cost:	$4,640.00	

TFF Holding Tank (P-8/V-102)

Function:	To hold the purified product from the TFF device	
Vendor:	Sartorius Stedim	
Operation:	Batch	
Materials Handled:	Input	Quantity
	Water	10000 g
	Media	0 g
	VLP	146 g
	Total	10146 g
Characteristics:	Material:	Stainless steel
	Total Volume:	500 L
Operating Conditions:	Temp:	22°C
	Pressure:	1.1 atm
Purchase Cost:	$1,682.00	

.

9.0 Cost Summary

9.1 Upstream Section

Upstream Process Equipment					
Name	Type	Size	Vendor	Equipment Name	Purchase Cost ($/Unit)
P-1/TTR-101	Test Tubes	300 mL	Freund Container	2 ml Sterile Plastic Vials	$255.00 (500 vials)
P-2/SFR-101	Shaker Flask	250 mL	Corning	Polycarbonate Erlenmeyer	$595.89 (50 flasks)
P-3/SFR-102	Shaker Flask	2 L	Corning	Polycarbonate Erlenmeyer	$204.55 (6 flasks)
P-4/SFR-103	Shaker Flask	4 L	Corning	Polycarbonate Erlenmeyer	$236.60 (4 flasks)
P-6/SBR-103	Bioreactor	50 L	GE Life Sciences	Xcellerex® Skid	$213,519.00
P-7/SBR-104	Bioreactor	500 L	GE Life Sciences	Xcellerex® Skid	$233,717.00
P-17/SBR-105	Bioreactor	2000 L	GE Life Sciences	Xcellerex® Skid	$930,446.00
	Bioreactor Bags	50-2000L	GE Life Sciences	Xcellerex® Bags	$1,000.00
P-18/HX-103	Heat Exchanger	1.5 m	Enerquip	Pharmaceutical Enerquip Exchanger	$109,082.86
P-11/HX-101	Heat Exchanger	1.5 m	Enerquip	Pharmaceutical Enerquip Exchanger	$109,082.86
P-16/HX-102	Heat Exchanger	1.5 m	Enerquip	Pharmaceutical Enerquip Exchanger	$109,082.86
P-19/V-105	Storage Tank	200 L	Sartorius Stedim	Flexel 3D Palletank® with tote	$1,682.00
P-10/V-102	Media Storage Tank	200 L	Sartorius Stedim	Flexel 3D Palletank® with tote	$1,682.00
P-15/V-104	Media Storage Tank	500 L	Sartorius Stedim	Flexel 3D Palletank® with tote	$2,915.00
P-9/MF-101	Sterile Filter		3M Purification	ZetaPlus Encapsulated	$4,500.00
P-14/MF-102	Sterile Filter		3M Purification	ZetaPlus Encapsulated	$4,500.00
P-8/V-101	Media Storage Tank	200 L	Sartorius Stedim	Flexel 3D Palletank® with tote	$1,682.00
P-13/V-103	Media Storage Tank	500 L	Sartorius Stedim	Flexel 3D Palletank® with tote	$2,915.00
	Raw Materials				
	Triton X-100		Millipore		$13311.51
	Tributyl phosphate		Millipore		$914.58
	Sodium Hydrogen Carbonate	2.5 kg	Millipore		$96.45
	Sodium Hydrogen Carbonate	12 kg	Millipore		$548.77
	Sodium Hydrogen Carbonate	25 kg	Millipore		$307.63
	EXCELL-405 Medium		Sigma-Aldrich		$96,820.00

9.2 Downstream Section

Downstream Process Equipment					
Name	Type	Size	Vendor	Equipment Name	Purchase Cost ($/Unit)
	Cell Harvest/Primary Recovery				
P-1/DS-101	Disk-Stack Centrifuge		Carr Centritech	Unifuge®	$400,000.00
S-102	Pump		Cole-Palmer	MasterFlex® B/T	$4,640.00
P-12/V-106	Storage Tank	200 L	Sartorius Stedim	Palletank®	$1,682.00
S-103	Pump		Cole-Palmer	MasterFlex® B/T	$4,640.00
P-9/V-103	Inactivator Tank	500 L	Sartorius Stedim	Palletank®	$4,500.00
S-104	Pump		Cole-Palmer	MasterFlex® B/T	$4,640.00
P-3/DF-101	Depth Filter		3M Purification	ZetaPlus Encapsulated	$4,500.00
	Depth Filtration Cassettes		3M Purification	ZetaPlus	$4,500.00
S-105	Pump		Cole-Palmer	MasterFlex® B/T	$4,640.00
P-7/V-101	Holding Tank	200 L	Sartorius Stedim	Palletank®	$1,682.00
	Chromatography				
S-106	Pump		Cole-Palmer	MasterFlex® B/T	$4,640.00
P-11/V-105	Chromatography Resin Tank	200 L	Sartorius Stedim	Palletank®	$1,682.00
	Chromatography Resin		GE Life Sciences	Sepharose Q XL	
P-4/INX-101	Ion Exchange Chromat. Column		GE Life Sciences	ReadyToProcess	$166,000.00
S-107	Pump		Cole-Palmer	MasterFlex® B/T	$4,640.00
S-101	Pump		Cole-Palmer	MasterFlex® B/T	$4,640.00
P-18/V-107	Holding Tank	200 L	Sartorius Stedim	Palletank®	$1,682.00
P-10/V-104	Chromatography Resin Tank	200 L	Sartorius Stedim	Palletank®	$1,682.00
S-108	Pump		Cole-Palmer	MasterFlex® B/T	$12,500.00
S-110	Pump		Cole-Palmer	MasterFlex® B/T	$4,640.00
P-5/C-101	Size Exclusion Chromat. Column		GE Life Sciences	ReadyToProcess	$166,000.00
	Chromatography Resin		GE Life Sciences	Sepharose 4 FF	
S-111	Pump		Cole-Palmer	MasterFlex® B/T	$4,640.00
P-19/V-108	Holding Tank	200 L	Sartorius Stedim	Palletank®	$1,682.00
	Filtration				
S-114	Pump		Cole-Palmer	MasterFlex® B/T	$4,640.00
P-6/DF-102	Tangential Flow Filtration (TFF)		Millipore	Pellicon XL50	$200,000.00
S-109	Pump		Cole-Palmer	MasterFlex® B/T	$4,640.00
P-8/V-102	Holding Tank	200 L	Sartorius Stedim	Palletank®	$4,500.00
S-112	Pump		Cole-Palmer	MasterFlex® B/T	$4,640.00

9.3 Additional Equipment and Processes

Additional Equipment & Processes					
Name	Type	Size	Vendor	Equipment Name	Purchase Cost ($/Unit)
P-17/FDR-101	Freeze Drier				$4,500.00
S-113	Pump		Cole-Palmer	MasterFlex® B/T	$4,640.00
P-13/FL-101	Filler		--		
P-14/LB-101	Labeling		--		
P-15/BX-101	Packaging		--		
P-16	Removal		SteriCycle		
---	Incubator		Sartorius Stedim		
---	Tube Fusers		Sartorius Stedim		
---	Tube Sealers		Sartorius Stedim		
---	Cryopreservation Bank		Sigma-Aldrich		
---	Temperature Control Module				

10.0 Important Considerations

10.1 Scheduling

10.1.1 Gantt Chart

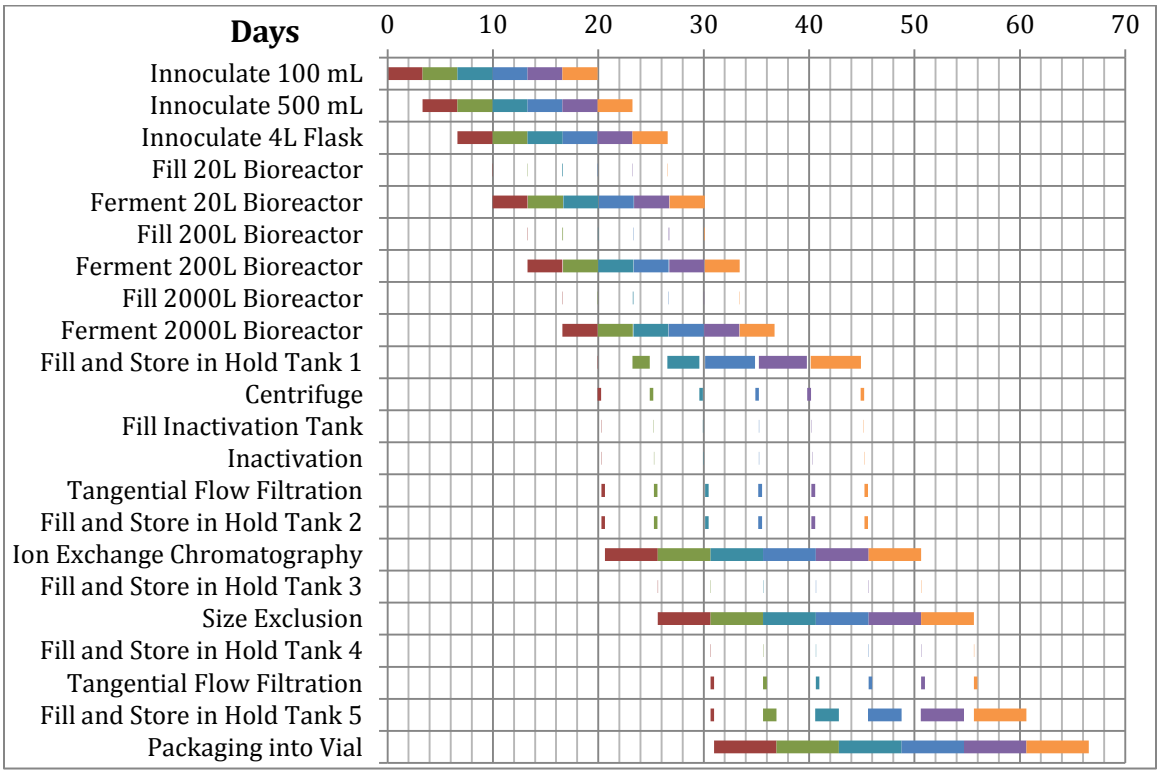

Figure 10.1 Gantt Chart. Shows scheduling times relative to each process equipment to give overall batch time.

Note: The change time of the bag liner of the bioreactors and storage tanks are 1 hour each, and they are included in the fill time of the corresponding unit.

10.2 Environmental Concerns

Biosynthesis of our vaccine product results in a number of waste streams. The process produces a substantial amount of solid biohazard waste which may contain recombinant baculovirus, insect cells, and metabolic waste products from the fermentation process. The solid waste components are collected into red biohazard receptacles within the facility for a biohazard waste removal service, Stericycle, to collect and treat. This waste will be incinerated to remove any potentially hazardous effects on the environment so that only greenhouse emissions from incineration are the only environmental impact. The facility will use Stericycle™ as the solid biohazard management service to insure proper waste disposal protocols are rigidly maintained.

None of the components used in the fermentation steps of this process are particularly dangerous or toxic to wildlife or the environment, since many of them are required for cell growth of any organism and are often found in nature. Many of these components will be heat-treated to sterilize the fermentation broth after removal of the VLPs through the downstream components. This sterilization procedure will denature any potential problematic proteins in the mixture. This waste will be neutralized in pH to insure no detrimental effects to wildlife in the location of disposal. The detergents used in the deactivation of baculovirus are collected as liquid waste via diafiltration. The filtrate is collected and retained as hazardous liquid waste.

10.3 Current Good Manufacturing Practices

The United States Food and Drug Administration (FDA) is responsible for overseeing and enforcing Good Manufacturing Practices in the United States. Current Good Manufacturing Processes (cGMP) guidelines are found in the Code of Federal Regulation 21 Part 211 (21 CFR 211). The purpose of cGMP regulations is to ensure that drug products are manufactured in a manner making them safe for human consumption by monitoring how drug products are sterilized and purified.

Sterilization and purity are monitored by paying careful attention to the process, quality of manufacturing equipment components, raw materials, as well as characteristics of cell lines used in recombinant processes. The manufacturing facility design and layout, as well as frequent testing are quintessential in ensuring quality consistent with FDA cGMP regulations. All authorized persons allowed to enter designated limited access areas, such as the production floor will have the proper training.

All equipment purchased is certified as being GMP approved by the FDA. Bioreactors with disposable bags and disposable transfer lines are used to ensure sterility, while reducing time between batches. The disposable bags and transfer lines are GMP certified and guaranteed by their manufacturers, therefore there is no need for CIP and SIP procedures on the bioreactors, which reduces change over time between batches. Tube fusers as well as sterile tube connectors are used to ensure that chance of contamination is minimized during transfer.

Specific guidelines pertaining to vaccine manufacture are described by the FDA in “Guidance for Industry, Characterization and Qualification of Cell Substrates and Other Biological Materials Used in the Production of Viral Vaccines for Infectious

Disease Indications." The guidelines are primarily concerned with modes of inactivating cells used for recombinant DNA, purity of vaccine, potential sources of contamination, and validation of purity at many stages during the vaccine manufacture.

We have selected the SF+ insect cell line as our cell substrate. These are not bovine or human derived; therefore there is low pathogenic transmission risk. This eliminates adventitious agents affiliated with human or bovine cell lines, as well as retroviruses, such as HIV, and bovine diseases such as Bovine spongiform encephalopathy which can be transmitted to humans.

Research and Development (R&D) is responsible for characterizing the growth characteristics and life expectancy of the SF Plus cells according to 21 CFR 610.18(c)(1)(iii). This includes documenting species of origin, tissue type, tumorigenic properties, and ability to harbor latent viruses or express infectious prion proteins (PrP). They will also create a master cell bank (MCB) for each virus strain. Every season, R&D will renew the MCB. Working Cell Banks (WCB) will be derived from their corresponding MCB for each batch. All WCB used to create the VLPs for a particular strain will be derived from their corresponding MCB. R&D will periodically test the MCB and WCB for cell viability and stability. The history of all WCB will be documented by Quality Assurance (QA) according to 21 CFR 610.18(c)(1)(i), including agents used in same biosafety cabinets and conditions under which the cells were passaged.

R&D will also be responsible for characterizing and documenting the viral seed. For our production methods, the baculovirus will be used to insert the desired influenza

DNA strain into SF Plus cells. The viral seed's stability will continually be monitored by R&D as well. Other documentation includes amino acids used in the growth media.
To minimize potential contamination, human contact with cells will be minimized. All employees working with the cells directly or on the production floor are required to wear the proper attire as set in 21 CFR 211. Once the shaker flasks are inoculated with the SF Plus cells, the cells will not be exposed to the ambient air. The transfer methods during the scale up are such that the cells need not be exposed, minimizing potential contamination opportunities. All cells drawn from the working cell bank (WCB) will be tested by the Quality Control (QC) group to ensure they do not contain infectious viruses or retroviruses.

The identity and purity of all raw materials will be checked by QC to ensure that they fall within the specifications approved by the FDA for the specific vaccine production method. This will occur before they are moved onto the production floor. No serums are used, therefore there is no need to concern ourselves with irradiation of raw materials.

During production, all specific markers relevant to the SF Plus cell line will be analyzed by QC and tracked throughout the different manufacturing passage levels. The ability of the cells to produce recombinant protein will be tracked, evaluating each copy number and the stability at each relevant passage.

Our interpretation of the definition of purity used by the FDA is removing 99% of cell growth media, cell substrate DNA, as well as any other adventitious agents that may be the product of cell debris. Size exclusion chromatography will be used because the VLP vaccine has a diameter of 90 to 120 nanometers and DNA has a diameter of 2.2 to

2.6 nanometers. This will allow for removal of 99.9% of DNA debris from the cell substrate. An ion exchange column will be used to remove any charged cell debris.

QC will also use a control set of cells, which are uninfected cell substrate. These cells will be grown in parallel at the same time as each batch with identical conditions to the batches of cells that are to be infected. This will emulate the conditions of the bioreactors and allow QC to determine any adventitious agents naturally produced by the cell substrate. The cells used for QC must be from the same WCB as the ones used in the bioreactor for validity of the control test. All assays will be validated and signed off by Quality Assurance (QA). All tests will be consistent with 21 CFR 610.18(c)(1)(iv).

After harvest, QC will test for adventitious agents in a method consistent with 21 CFR 610.30. Since our production method uses a lytic infection, it is not necessary to check for surviving cells before harvest. To maintain full compliance with FDA regulations, QC will ensure there are no surviving cells. Chances are slim due to the lytic infection, but if surviving cells remain, the batch will be checked for adventitious agents. At this point the harvested batch can be filtered. Post filtration, QC will test each batch for bacterial and fungal sterility. Finally, each batch will be tested for residual cellular proteins and cellular nucleic acids. All residual cells and low levels of cell-substrate DNA will be removed to assure safety, identity, purity, potency, and quality.

In accordance with 21 CFR, all process automation will be consistent with Part 211.68; Filtration will be consistent with Part 211.72; Storage will be consistent with Parts 211.80, 211.82, and 211.94; Quality testing will be consistent with Parts 211.84, 211.87, and 211.89; Process time speculations will be consistent with Part 211.111; Contamination Control will be consistent with Part 211.113; Holding and Distribution

will be consistent with parts 211,142 and 211,158; Control Units and software will be consistent with Part 211.160. Standard Operation Procedures will be developed for all actions necessary during the manufacturing production, including sterilization, facility cleaning, and training consistent with 21 CFR Parts 211.100, 211.101, 21.110. All Record keeping will be consistent with 21 CFR Part 211 Subpart J.

All relevant information regarding GMP was found on the FDA website and taken from *CFR- Code of Federal Regulations Title 21.*

10.4 Laboratory and Production Facility Layout

The diagram shown below is a typical layout of a vaccine manufacturing facility. The insect cell culture and influenza vaccine development facility will be modeled after this depiction and retrofit into an existing site used for additional vaccine manufacturing. For a goal of 100 million doses per year, the facility will have to be approximately 140K square feet. Single-use equipment will be used throughout the facility to reduce change-over time, fixed piping, cleaning and validation costs, and to increase operational flexibility.

The layout is designed to maintain multiple disposable bioreactors up to 2000 L in size. The facility design criteria will meet the BSL-2 requirements with inoculum and cell culture in class C, cell culture, downstream processing, and media and buffer preparation in class D. The media and buffer will be stored in controlled, non-classified areas. The batch duration will be approximately 8 weeks, including change-over times. This simplifies to 4 weeks allotted to inoculum and cell culture, 2 weeks for bioreactor production, and 2 weeks for further purification and downstream processing.

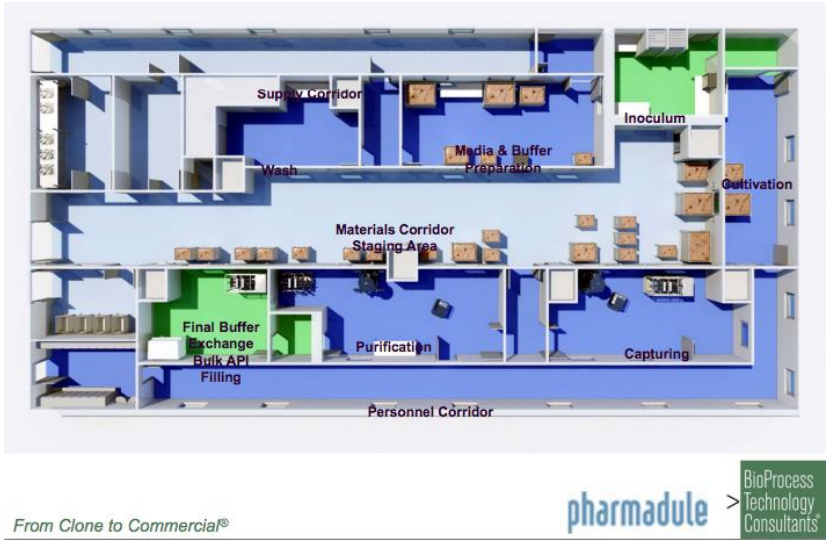

Figure 10.2 Design schematic for single-use influenza vaccine manufacturing facility with insect cell culture

10.5 Labor Costs and Structure

The influenza vaccine facility will operate under the Global Manufacture and Supply chain. Under this, the two major branches concerned with this process are quality and manufacturing. The quality side handles paperwork and checks that all products and processes fall within regulations. Manufacturing's scope consists of all operations facility and is split between process engineering and procurement. Positions of contract specialist manager, operators, and contractors within the warehouse will be paid on an hourly wage, while the general contract specialists, engineers, and the warehouse manager will be paid on a salary wage.

Positions such as internal auditors and higher management in procurement do not fall under the fixed costs for this facility. Based on average wages in Durham, North Carolina, the total cost of a labor force of 71 employees for the year is estimated at $1.75 million. However, since the influenza vaccine production only operates for half the year, with only four months of production, only a third of the total cost of labor is accountable to this process, $584,000 (see Appendix A, Labor Costs for calculations). This cost will go into fixed costs for each year the facility is operating.

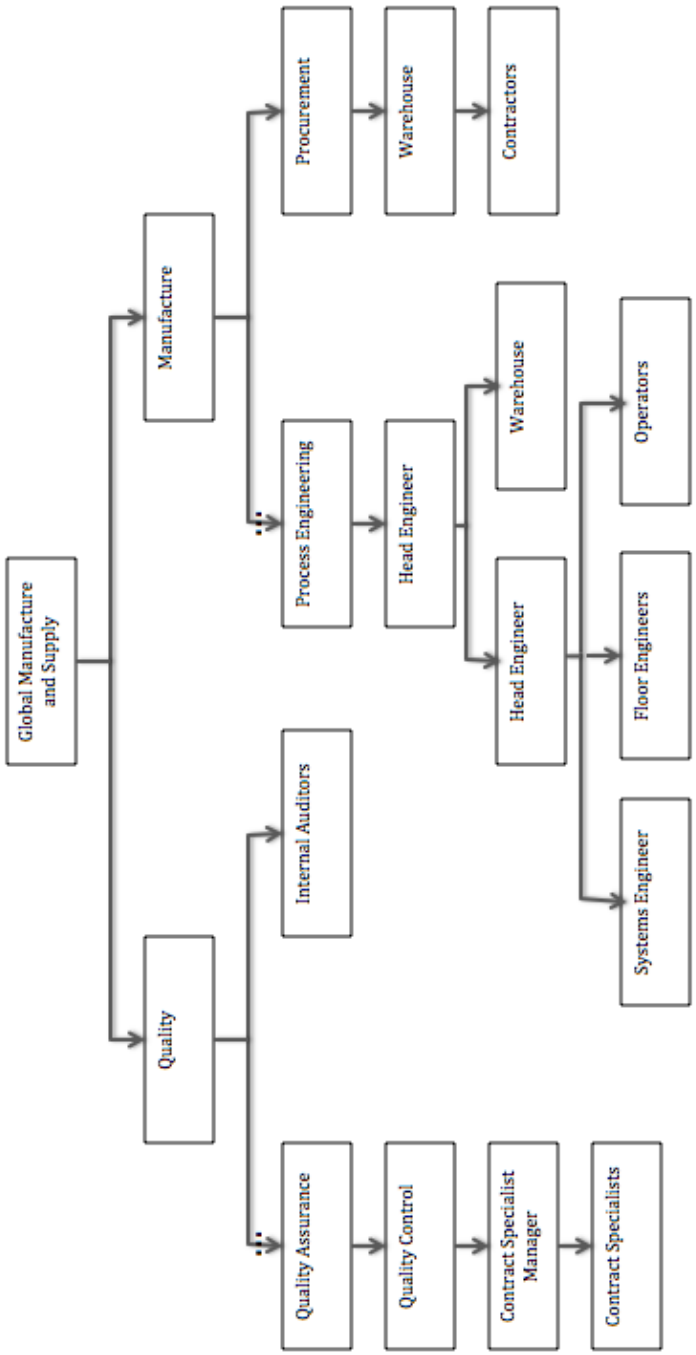

Figure 10.3 Diagram showing the labor structure for the vaccine manufacturing facility. The Global Manufacture and Supply Group for the vaccine plant branches into two major operations: quality and manufacture.

11.0 Economic Analysis

11.1 Market Analysis

The influenza virus is a seasonal virus that typically affects the upper respiratory track. In severe cases, it can lead to pneumonia and even death. Annually, the World Health Organization (WHO) estimates epidemics to affect anywhere from 5% to 15% of the global population ("World Health…"). Most patients affected by the influenza virus will suffer illness for a week, without requiring medical attention. This can lead to anywhere from three to five million cases of severe illness; it is estimated that there is an annual death rate of about 250,000 to 500,000 globally ("Influenza…"). These deaths usually occur among the chronically ill, the elderly, and the young.

The most common vaccine used to prevent the influenza virus is a trivalent vaccine containing an A type Subtype H3N2 virus strain, an A type Subtype H1N1 virus strain, and a B Type strain ("World Health…"). The common method for vaccine production is allowing the virus to proliferate in chicken eggs, and then harvesting the influenza virus from the chicken embryo. The large costs of treating the cases of influenza outbreak paired with the threat of pandemic outbreak have also led to a larger demand for influenza vaccine. New methods, such as the use of MDKC to produce the virus capsid and elicit an immune response have been investigated as potential methods to meet the growing demand for influenza vaccines ("Influenza…").

Between 2010 and 2011, the global market value reached $4 billion US Dollars (USD) for all seven of the major influenza vaccine markets ("Influenza…"). Between 2008 and 2010, the influenza vaccine market grew a stunning 65%, driven primarily by the threat of a pandemic H1N1 outbreak (Wood). Market growth this large is not

expected to continue long term, however. The compound annual growth rate is expected to be 3.9% over the next six years ("Seasonal…"). By 2018, this market value is expected to reach up to $5 billion USD ("Influenza…"). Currently, there are only five influenza vaccine producers in the US market with Sanofi Pasteur capturing the largest market share of $1 billion USD. It is also estimated that annual influenza outbreak in the USA costs $80 billion USD ("Influenza…"). The large market value is appealing to pharmaceutical companies that can effectively produce an influenza vaccine.

There are seven major vaccine markets globally. Seen in Figure 10.4 ("Influenza…"), the US is the largest market share of an individual country, occupying about 40% of the influenza vaccine market ("Influenza…"). Germany, Italy, Spain, France, the UK, and Japan are the other major vaccine market players. The European players (Germany, Italy, Spain, France, and the UK) account for about 50% of the European influenza market share ("Influenza…"). The Japanese market accounts for the remaining 10% of the influenza vaccine market.

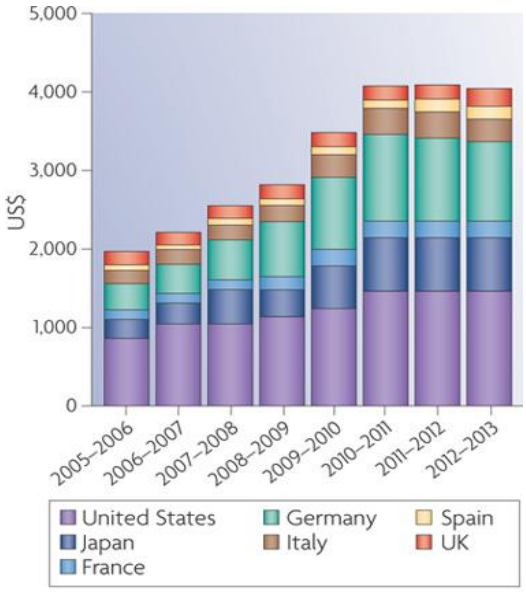

Figure 10.4 This shows the market share of the 7 major vaccine markets globally. It was used to show the feasibility of the market share we expect to capture. ("Influenza…")

Currently, WHO estimates the USA as being one of the leaders in influenza vaccination, consuming approximately 40% of total vaccines produced annually, seen in Figure 10.4. The threat of pandemic flu outbreak has led WHO to issue recommendations to increase vaccination up to 85% of the US population ("Influenza…"). To meet the increase in demand, we investigated the production of an influenza vaccine via the baculovirus in the SF+ insect cell line. In order for the vaccine to be lucrative and capture a share of the influenza vaccine market, production cost of the vaccine must be competitive with current egg-based production methods.

In 2009, the 149 million doses of the seasonal influenza vaccine were supplied to Europe, as seen in Figure 10.5 (Hombach). From Figure 10.6 ("Influenza…"), it is seen that 143 million doses of seasonal influenza vaccine were supplied to the United States in 2009 (Kresse). Based on current market growth rates, 3.9% compounded annual ("Seasonal…"), it is expected that the percentage of people vaccinated in Germany, Italy, Spain, France, the UK, the United States, and Japan will increase from 28.9% in 2011 to 32.9% by 2018. Based on these expected vaccination rates, the number of vaccines supplied to Europe and the US will increase from 292 million seasonal influenza doses to approximately 330 million doses.

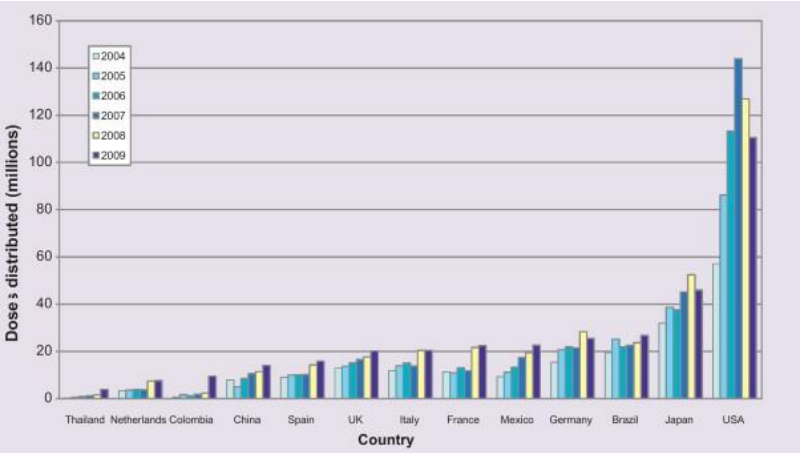

Figure 10.5 This shows the supply of influenza vaccines different countries globally between 2005 and 2009. It was used to determine the global market share and determine the number of doses that our company could potentially supple to the market. (Hombach)

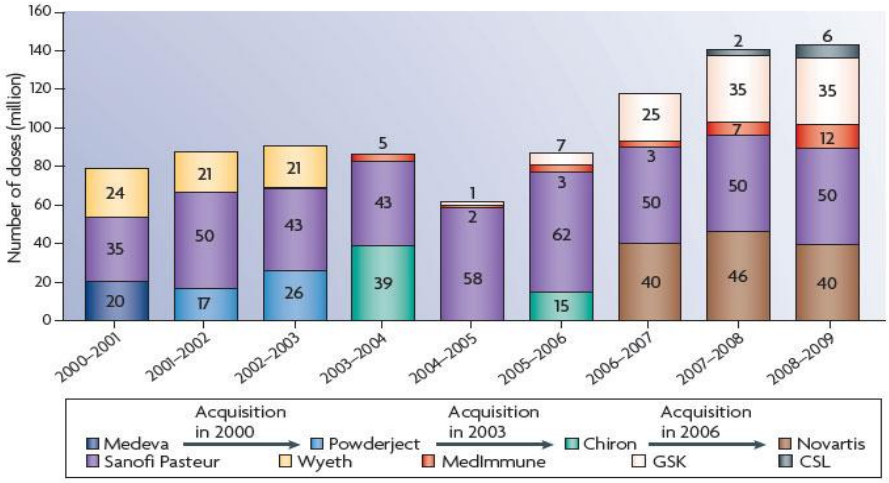

Figure 10.6 This shows the number of influenza vaccine doses supplied to the United States in 2009. It also shows the share of each company. This data was used in determining the number of doses our company can supply to the US. ("Influenza…")

Sanofi Pasteur™ was responsible for producing 200 million doses of trivalent egg-based seasonal influenza vaccinations in 2010, as well as 126 million pandemic influenza vaccine doses (Sanofi Pasteur). From Figure 10.6 ("Influenza…"), it can be seen that they supplied 25% of their doses to the United States. For a company to enter the market and hold a large market share in Europe, a similar number of doses must be supplied to Europe as well; therefore, our company plans to manufacture and 100 million

doses of seasonal influenza to the United States and European markets. Half of the doses will be distributed to Europe, and half will be distributed to the United States.

This is a reasonable market stake, and feasible to produce in a single facility. Sanofi Pasteur™'s facility in Swiftwater, Pennsylvania is capable of producing 150 million doses of trivalent seasonal influenza vaccine doses annually (Sanofi Pasteur). In 2009, members of The International Federation of Pharmaceutical Manufacturers & Associations (IFPMA) International Vaccine Supply (IVS) Task Force supplied 449 million doses of seasonal influenza vaccine, accounting for 75% of total influenza vaccines distributed (Palache). Therefore, the market is approximately 600 million seasonal influenza vaccines, annually. Our production goal of 100 million vaccines would increase the global market by 16.7%, moving the world closer to the WHO's goal of 750 million doses of influenza vaccine produced annually.

Since only 5 companies globally produce and supply an influenza vaccine, there is room for entry into the market. Our company will supply 86,184,000 doses of trivalent seasonal influenza vaccine to the market. This would capture about 14.7% of the global market share, supplying to only Europe and the United States.

11.1.1 Investor Interest

Health and Biotechnology sectors are known for their large profits. While it is true that there are potentially large returns in the pharmaceutical, biotechnology, and healthcare industries, it comes with a large investment risk. The risk comes from the Research and Development (R&D) side, with 38% of the firm's financial asset value being spent on research (Golec). Outside of the biotechnology industry, an average of 3% of a firm's financial asset value was spent on research.

There is more risk on the failure of products to reach the market. Approximately only 1 in every 10,000 compounds being investigated – commonly referred to as investigational new drugs (INV) – make it to market. When a drug makes it to market, it is quintessential that the company recovers money lost on research and clinical trials, as well as sunk costs from failed investigated new drugs. In 2011, the biotechnology market as a whole increased revenue to a 1% margin over costs, increasing revenue a full 8% from 2009 (Suresh). The small revenue margin is due to large research costs, clinical testing costs, and the sunk costs of failed products.

To succeed in a market with high failure rates, successful drugs must have high mark ups. In 2012, GSK™ and Sanofi Pasteur™ had an overall product profit margin of 29% and 32%, respectively, in their vaccine divisions (Angelmar). The overall pharmaceutical industry mark-up is approximately 30% across the industry (Angelmar). Therefore, our company must be capable of producing our trivalent influenza vaccine with at least a 30% profit margin.

From the time a company files for a patent, they have 17 years before other companies can manufacture a generic form of the drug. Influenza vaccines are different

because the strain changes annually. Because of antigenic drift, there is no patented influenza vaccine, or generic brand. The influenza vaccine is less proprietary than other drug products. The production method of the vaccine, the dosing, and method of delivery is where the proprietary value lies in the influenza vaccine market. Producing a non-egg based method with less lag time by using recombinant insect cell culture technology therefore has large value.

Currently, only egg-based methods and a recombinant mammalian cell culture are used to produce the influenza vaccine. FluBok™ a recombinant influenza vaccine produced using Chinese Hamster Ovary (CHO) cells, a mammalian cell culture. FluBok™ is the only approved non-egg based influenza vaccine on the market. With the push to move away from egg-based production methods that have large lead times, our company has room to enter the market.

11.2 Profitability Analysis

To determine the profitability of the vaccine manufacturing facility, the profitability analysis worksheet (Version 3.0), developed by Nickish Consulting was used. The analysis is broken down into equipment costs and total permanent investment, working capital, utilities, fixed costs, and other variable costs.

11.2.1. Equipment Costs and Total Permanent Investment

The purchase cost of all raw materials and equipment was determined by direct contact with vendors, through the use of CDI Engineering Group's Equipment List, or through sources such as BioPharm International or BioProcess International. The bare module factors for all units were gathered from Chapter 22 of *Product and Process Design Principles.*

The Total Permanent Investment accounts for the cost of site preparations, service facilities, contingencies and contractor fees, and plant start-up. As listed in Chapter 22 of *Product and Process Design Principles*, the cost of site preparations will be 5.0% of the total bare module cost, the cost of service facilities will be 5.0% of the Total Bare Module cost, the cost of contingencies and contractor fees will be 18.0% of the Total Depreciable Capital, and the cost of plant start-up will be 10.0% of the Total Depreciable Capital. Since this manufacturing facility will be retrofit to an existing site, there will be no cost associated with land.

Equipment Costs

Fabricated Equipment	Purchase Cost	Quantity	Bare Module Factor	Bare Module Cost
Test Tubes/Plastic Vials	$255.00	1	1.00	$255.00
Shaker Flasks - 250 mL (pack of 6)	$160.57	1	1.00	$160.57
Shaker Flasks - 2 L	$51.71	6	1.00	$310.26
Shaker Flasks - 4 L	$150.25	6	1.00	$901.50
Disposable Bioreactors -50 L	$213,519.00	4	4.16	$3,552,956.16
Disposable Bioreactors -500 L	$233,717.00	4	4.16	$3,889,050.88
Disposable Bioreactors- 2000L	$930,446.00	4	4.16	$15,482,621.44
Disposable Reactor Bags -50 L	$1,000.00	4	1.10	$4,400.00
Disposable Reactor Bags -500 L	$1,000.00	4	1.10	$4,400.00
Disposable Reactor Bags -2000 L	$1,000.00	4	1.10	$4,400.00
Depth Filtration Unit (DSP)	$4,500.00	4	1.10	$19,800.00
Depth Filtration Cassettes	--	4	1.10	--
Sterile Filtration Unit (USP)	$4,500	8	1.10	$39,600.00
Filtration Cassettes	--	8	1.10	--
Chromatography Columns	$166,000.00	8	1.10	$1,460,800.00
pH Adjustment Tank	$20,000.00	1	4.16	$83,200.00

Process Machinery	Purchase Cost	Quantity	Bare Module Factor	Bare Module Cost
Disk-Stack Centrifuge	$400,000.00	4	2.03	$3,248,000.00
Pumps	$4,640.00	27	3.30	$459,360.00
Virus Inactivation Tank	$4,500.00	4	4.16	$74,880.00
Holding Tanks	$1,682.00	16	4.16	$111,953.92
Chromatography Resin Tanks	$1,682.00	8	4.16	$55,976.96
Tangential Flow Filtration Unit	$200,000.00	4	2.32	$1,856,000.00
Heat Exchangers	$109,082.82	9	3.291	$3,230,924.00

Spares	Purchase Cost	Quantity	Bare Module Factor	Bare Module Cost
Filter Integrity Tester	$4,500.00	5	1	$22,500.00
Bioinactivation System	$10,000.00	1	3.5	$35,000.00
Tube Fusers	$15,300.00	1	1	$15,300.00
Tube Sealers	$10,200.00	1	1	$10,200.00

Storage	Purchase Cost	Quantity	Bare Module Factor	Bare Module Cost
Incubator	$3,700.00	4	1.74	$25,752.00
Storage Tanks	$1,682.00	8	4.16	$55,976.96
Media Storage Tanks-200 L	$1,682.00	8	4.16	$55,976.96
Media Storage Tanks-500 L	$2,915.00	8	4.16	$97,011.20
Freeze Dryer	$4,500.00	4	2.05	$36,900.00
Biosafety Cabinet	$10,000.00	1	1.10	$11,000.00
Bag Holders	$1,000.00	18	1.10	$19,800.00

Total Permanent Investment

Cost of Site Preparations:	5.0% of Total Bare Module Costs
Cost of Service Facilities:	5.0% of Total Bare Module Costs
Allocated Costs for utility plants and related facilities:	$0
Cost of Contingencies/Contractor Fees:	18.0% of Direct Permanent Investment
Cost of Retrofit:	$0
Cost of Royalties:	$0
Cost of Plant Start-Up:	10.0% of Total Depreciable Capital

11.2.2 Working Capital & Utilities

The working capital of a facility is defined as the sum of the cash reserves, inventory, and accounts receivable, minus the accounts payable. The cash reserves typically include 30 days of raw materials, utilities, operation, and maintenance. For the majority of cases, 30 days of accounts receivable for products at sales price and 30 days of feedstocks for accounts payable can be assumed. The inventory is assumed to be 7 days worth of liquid and solid products at sales price; however, this was very dependent on the material being considered. For the raw materials, such as media, cell culture supplies, and chemical ingredients, an inventory of 30 days was assumed.

11.2.3 Other Variable Costs

The other variable costs include the selling/transferring of expenses and the management incentive compensation. These factors are included in the Profitability Analysis spreadsheet.

Working Capital			
Accounts Receivable	=>	30	Days
Cash Reserves (excluding Raw Materials)	=>	30	Days
Accounts Payable	=>	30	Days
VLP for Influenza Vaccine Inventory	=>	28	Days
Raw Materials	=>	90	Days

Other Variable Costs		
General Expenses		
Selling / Transfer Expenses:	3.00%	of Sales
Direct Research:	10.00%	of Sales
Allocated Research:	0.50%	of Sales
Administrative Expense:	2.00%	of Sales
Management Incentive Compensation:	1.25%	of Sales

11.2.4 Fixed Costs

With a total of four months of operation (120 days), and 3 shifts per day, 71 employees will be required in both the Quality and Manufacture sectors. The upstream and downstream processes will require 6 workers each per shift. The fixed costs also include the wages and benefits of maintenance, quality control, and technical assistants. Section 10.5 on labor costs and structure goes into further detail regarding the personnel and services surrounding all units as well as their respective salaries and benefits.

11.2.5 Depreciation

The MACRS Tax-Basis Depreciation for 5 years was used for this manufacturing process. According to *Product and Process Design Principles*, the percentages of Total Depreciable Capital beginning with year 1 are: 20%, 32%, 19.2%, 11.52%, and 5.76%.

11.3 Input Summary

General Information

Process Title:	**Manufacturing of Insect Cell Culture VLP-based Influenza Vaccine**
Product:	**API for Influenza Vaccine**
Plant Site Location:	**Research Triangle Park, NC**
Site Factor:	**1.10**
Operating Hours per Year:	**4383**
Operating Days Per Year:	**183**
Operating Factor:	**0.5003**

Product Information

This Process will Yield

	10,924	doses of API for Influenza Vaccine per hour
	262,177	doses of API for Influenza Vaccine per day
	47,880,000	doses of API for Influenza Vaccine per year
Price	**$8.12**	**/doses**

Chronology

Year	Action	Distribution of Permanent Investment	Production Capacity	Depreciation 7 year MACRS	Product Price
2013	Production	100%	81.0%	14.29%	$8.12
2014	Production	0%	90.0%	24.49%	$8.12
2015	Production	0%	90.0%	17.49%	$8.12
2016	Production	0%	90.0%	12.49%	$8.12
2017	Production		90.0%	8.93%	$8.12
2018	Production		90.0%	8.92%	$8.12
2019	Production		90.0%	8.93%	$8.12
2020	Production		90.0%	4.46%	$8.12
2021	Production		90.0%		$8.12
2022	Production		90.0%		$8.12

11.4. Profitability Analysis

11.4.1 Profitability Analysis Results for 20% Efficiency in Downstream

Equipment Costs

Equipment Description		Bare Module Cost
Test Tubes	Fabricated Equipment	$255
1 Shaker Flasks (250 mL)	Fabricated Equipment	$596
6 Shaker Flasks (2 L)	Fabricated Equipment	$5,106
6 Shaker Flasks (3 L)	Fabricated Equipment	$1,969
4 Disposable Bioreactors (50 L)	Fabricated Equipment	$3,552,956
4 Disposable Bioreactors (500 L)	Fabricated Equipment	$3,889,051
4 Disposable Bioreactors (2000 L)	Fabricated Equipment	$15,482,621
4 Reactor Totes (50 L)	Fabricated Equipment	$4,400
4 Reactor Totes (500 L)	Fabricated Equipment	$4,400
4 Reactor Totes (2000 L)	Fabricated Equipment	$4,400
4 Depth Filtration Units	Fabricated Equipment	$39,600
8 Sterile Filtration Units	Fabricated Equipment	$79,200
8 Chromatography Columns	Fabricated Equipment	$1,460,800
4 Disk-Stack Centrifuges	Process Machinery	$3,248,000
4 Viral Inactivation Tanks	Process Machinery	$74,880
16 Holding Tanks	Process Machinery	$111,954
8 Resin Tanks	Process Machinery	$55,977
4 Tangential Flow Filtration Units	Process Machinery	$1,856,000
27 Pumps	Process Machinery	$413,424
9 Heat Exchangers	Process Machinery	$3,229,942
4 Incubators	Storage	$25,752
8 Storage Tanks	Storage	$55,977
8 Media Storage Tanks (200 L)	Storage	$55,977
8 Media Storage Tanks (500 L)	Storage	$97,011
Biosafety Cabinet	Storage	$11,000
18 Bag Holders	Storage	$19,800
Filter Integrity Tester	Spares	$4,500
Bioinactivation System	Spares	$35,000
Tube Fusers	Spares	$15,300
Tube Sealers	Spares	$10,200

11.4.1 Profitability Analysis Results for 20% Efficiency in Downstream

Variable Cost Summary			
Variable Costs at 100% Capacity:			
General Expenses			
	Selling / Transfer Expenses:		$11,667,303
	Direct Research:		$38,891,009
	Allocated Research:		$149,730,384
	Administrative Expense:		$7,778,202
	Management Incentive Compensation:		$4,861,376
Total General Expenses			$212,928,273
Raw Materials	$0.015991	per doses of API for Influenza Vaccine	$765,658
Byproducts	$0.000000	per doses of API for Influenza Vaccine	$0
Utilities	$0.018525	per doses of API for Influenza Vaccine	$886,971
Total Variable Costs			**$214,580,902**

11.4.1 Profitability Analysis Results for 20% Efficiency in Downstream

Fixed Cost Summary		
Operations		
	Direct Wages and Benefits	$364,000
	Direct Salaries and Benefits	$54,600
	Operating Supplies and Services	$21,840
	Technical Assistance to Manufacturing	$-
	Control Laboratory	$-
	Total Operations	**$440,440**
Maintenance		
	Wages and Benefits	$1,522,744
	Salaries and Benefits	$380,686
	Materials and Services	$1,522,744
	Maintenance Overhead	$76,137
	Total Maintenance	**$3,502,310**
Operating Overhead		
	General Plant Overhead:	$164,864
	Mechanical Department Services:	$55,729
	Employee Relations Department:	$137,000
	Business Services:	$171,830
	Total Operating Overhead	**$529,423**
Property Taxes and Insurance		
	Property Taxes and Insurance:	$676,775
Other Annual Expenses		
	Rental Fees (Office and Laboratory Space):	$-
	Licensing Fees:	$-
	Miscellaneous:	$-
	Total Other Annual Expenses	**$-**
Total Fixed Costs		**$5,148,948**

11.4.1 Profitability Analysis Results for 20% Efficiency in Downstream

Investment Summary

Bare Module Costs		
Fabricated Equipment	$24,518,054	
Process Machinery	$8,990,177	
Spares	$65,000	
Storage	$265,517	
Other Equipment	$-	
Catalysts	$-	
Computers, Software, Etc.	$-	
Total Bare Module Costs:		**$33,838,748**
Direct Permanent Investment		
Cost of Site Preparations:	$-	
Cost of Service Facilities:	$-	
Allocated Costs for utility plants and related facilities:	$-	
Direct Permanent Investment		**$33,838,748**
Total Depreciable Capital		
Cost of Contingencies & Contractor Fees	$-	
Total Depreciable Capital		**$33,838,748**
Total Permanent Investment		
Cost of Land:	$-	
Cost of Royalties:	$-	
Cost of Plant Start-Up:	$-	
Total Permanent Investment - Unadjusted		$33,838,748
Site Factor		1.10
Total Permanent Investment		**$37,222,623**

11.4.1 Profitability Analysis Results for 20% Efficiency in Downstream

Profitability Measures

The Internal Rate of Return (IRR) for this project is	Negative IRR
The Net Present Value (NPV) of this project in 2013 is	$619,244,200

ROI Analysis (Third Production Year)

Annual Sales	**350,019,079**	
Annual Costs	**(198,271,760)**	
Depreciation	**(2,977,810)**	
Income Tax	**(6,694,628)**	
Net Earnings	**142,074,882**	
Total Capital Investment		**93,336,250**
ROI	**152.22%**	

11.4.1 Profitability Analysis Results for 20% Efficiency in Downstream

Cash Flow Summary

Year	Percentage of Design Capacity	Product Unit Price	Sales	Capital Costs	Working Capital	Var Costs	Fixed Costs	Depreciation	Depletion Allowance	Taxible Income	Taxes	Net Earnings	Cash Flow	Cumulative Net Present Value at 20.7%
2013	81%	$8.12	315,017,200	(37,222,600)	(56,113,600)	(173,810,500)	(5,148,900)	(4,835,600)	-	131,222,100	(5,905,000)	125,317,100	36,816,400	36,816,400
2014	90%	$8.12	350,019,100	-	-	(193,122,800)	(5,148,900)	(8,287,100)	-	143,460,200	(6,455,700)	137,004,500	145,291,600	157,190,600
2015	90%	$8.12	350,019,100	-	-	(193,122,800)	(5,148,900)	(5,918,400)	-	145,828,900	(6,562,300)	139,266,600	145,185,000	256,847,500
2016	90%	$8.12	350,019,100	-	-	(193,122,800)	(5,148,900)	(4,226,500)	-	147,520,900	(6,638,400)	140,882,400	145,108,900	339,369,900
2017	90%	$8.12	350,019,100	-	-	(193,122,800)	(5,148,900)	(3,021,800)	-	148,725,500	(6,692,600)	142,032,900	145,054,700	407,714,300
2018	90%	$8.12	350,019,100	-	-	(193,122,800)	(5,148,900)	(3,018,400)	-	148,728,900	(6,692,800)	142,036,100	145,054,500	464,337,600
2019	90%	$8.12	350,019,100	-	-	(193,122,800)	(5,148,900)	(3,021,800)	-	148,725,500	(6,692,600)	142,032,900	145,054,700	511,250,000
2020	90%	$8.12	350,019,100	-	-	(193,122,800)	(5,148,900)	(1,509,200)	-	150,238,100	(6,760,700)	143,477,400	144,986,600	550,098,800
2021	90%	$8.12	350,019,100	-	-	(193,122,800)	(5,148,900)	-	-	151,747,300	(6,828,600)	144,918,700	144,918,700	582,269,900
2022	90%	$8.12	350,019,100	-	56,113,600	(193,122,800)	(5,148,900)	-	-	151,747,300	(6,828,600)	144,918,700	201,032,300	619,244,200

11.4.2 Profitability Analysis for 36% Efficiency for Downstream

General Information

Process Title:	**Manufacturing of Insect Cell Culture VLP-based Influenza Vaccine**
Product:	**API for Influenza Vaccine**
Plant Site Location:	**Research Triangle Park, NC**
Site Factor:	**1.10**
Operating Hours per Year:	**4383**
Operating Days Per Year:	**183**
Operating Factor:	**0.5003**

Product Information

This Process will Yield

	19,663	doses of API for Influenza Vaccine per hour
	471,918	doses of API for Influenza Vaccine per day
	86,184,000	doses of API for Influenza Vaccine per year
Price	**$8.12**	**/doses**

Chronology

Year	Action	Distribution of Permanent Investment	Production Capacity	Depreciation 7 year MACRS	Product Price
2013	Production	100%	81.0%	14.29%	$8.12
2014	Production	0%	90.0%	24.49%	$8.12
2015	Production	0%	90.0%	17.49%	$8.12
2016	Production	0%	90.0%	12.49%	$8.12
2017	Production		90.0%	8.93%	$8.12
2018	Production		90.0%	8.92%	$8.12
2019	Production		90.0%	8.93%	$8.12
2020	Production		90.0%	4.46%	$8.12
2021	Production		90.0%		$8.12
2022	Production		90.0%		$8.12

11.4.2 Profitability Analysis for 36% Efficiency for Downstream

Equipment Costs

Equipment Description		Bare Module Cost
Test Tubes	Fabricated Equipment	$255
1 Shaker Flasks (250 mL)	Fabricated Equipment	$596
6 Shaker Flasks (2 L)	Fabricated Equipment	$5,106
6 Shaker Flasks (3 L)	Fabricated Equipment	$1,969
4 Disposable Bioreactors (50 L)	Fabricated Equipment	$3,552,956
4 Disposable Bioreactors (500 L)	Fabricated Equipment	$3,889,051
4 Disposable Bioreactors (2000 L)	Fabricated Equipment	$15,482,621
4 Reactor Totes (50 L)	Fabricated Equipment	$4,400
4 Reactor Totes (500 L)	Fabricated Equipment	$4,400
4 Reactor Totes (2000 L)	Fabricated Equipment	$4,400
4 Depth Filtration Units	Fabricated Equipment	$39,600
8 Sterile Filtration Units	Fabricated Equipment	$79,200
8 Chromatography Columns	Fabricated Equipment	$1,460,800
4 Disk-Stack Centrifuges	Process Machinery	$3,248,000
4 Viral Inactivation Tanks	Process Machinery	$74,880
16 Holding Tanks	Process Machinery	$111,954
8 Resin Tanks	Process Machinery	$55,977
4 Tangential Flow Filtration Units	Process Machinery	$1,856,000
27 Pumps	Process Machinery	$413,424
9 Heat Exchangers	Process Machinery	$3,229,942
4 Incubators	Storage	$25,752
8 Storage Tanks	Storage	$55,977
8 Media Storage Tanks (200 L)	Storage	$55,977
8 Media Storage Tanks (500 L)	Storage	$97,011
Biosafety Cabinet	Storage	$11,000
18 Bag Holders	Storage	$19,800
Filter Integrity Tester	Spares	$4,500
Bioinactivation System	Spares	$35,000
Tube Fusers	Spares	$15,300
Tube Sealers	Spares	$10,200

11.4.2 Profitability Analysis for 36% Efficiency for Downstream

Variable Cost Summary			
Variable Costs at 100% Capacity:			
General Expenses			
	Selling / Transfer Expenses:		$21,001,145
	Direct Research:		$70,003,816
	Allocated Research:		$269,514,691
	Administrative Expense:		$14,000,763
	Management Incentive Compensation:		$8,750,477
Total General Expenses			$383,270,892
Raw Materials	$0.008884	per doses of API for Influenza Vaccine	$765,658
Byproducts	$0.000000	per doses of API for Influenza Vaccine	$0
Utilities	$0.010292	per doses of API for Influenza Vaccine	$886,971
Total Variable Costs			**$384,923,520**

11.4.2 Profitability Analysis for 36% Efficiency for Downstream

Fixed Cost Summary

Operations		
	Direct Wages and Benefits	$364,000
	Direct Salaries and Benefits	$54,600
	Operating Supplies and Services	$21,840
	Technical Assistance to Manufacturing	$-
	Control Laboratory	$-
	Total Operations	**$440,440**
Maintenance		
	Wages and Benefits	$1,522,744
	Salaries and Benefits	$380,686
	Materials and Services	$1,522,744
	Maintenance Overhead	$76,137
	Total Maintenance	**$3,502,310**
Operating Overhead		
	General Plant Overhead:	$164,864
	Mechanical Department Services:	$55,729
	Employee Relations Department:	$137,000
	Business Services:	$171,830
	Total Operating Overhead	**$529,423**
Property Taxes and Insurance		
	Property Taxes and Insurance:	$676,775
Other Annual Expenses		
	Rental Fees (Office and Laboratory Space):	$-
	Licensing Fees:	$-
	Miscellaneous:	$-
	Total Other Annual Expenses	**$-**
Total Fixed Costs		**$5,148,948**

11.4.2 Profitability Analysis for 36% Efficiency for Downstream

Investment Summary

Bare Module Costs		
Fabricated Equipment	$24,518,054	
Process Machinery	$8,990,177	
Spares	$65,000	
Storage	$265,517	
Other Equipment	$-	
Catalysts	$-	
Computers, Software, Etc.	$-	
Total Bare Module Costs:		**$33,838,748**
Direct Permanent Investment		
Cost of Site Preparations:	$-	
Cost of Service Facilities:	$-	
Allocated Costs for utility plants and related facilities:	$-	
Direct Permanent Investment		**$33,838,748**
Total Depreciable Capital		
Cost of Contingencies & Contractor Fees	$-	
Total Depreciable Capital		**$33,838,748**
Total Permanent Investment		
Cost of Land:	$-	
Cost of Royalties:	$-	
Cost of Plant Start-Up:	$-	
Total Permanent Investment - Unadjusted		$33,838,748
Site Factor		1.10
Total Permanent Investment		**$37,222,623**

11.4.2 Profitability Analysis for 36% Efficiency for Downstream

Profitability Measures

The Internal Rate of Return (IRR) for this project is	Negative IRR
The Net Present Value (NPV) of this project in 2013 is	$1,168,887,900

ROI Analysis (Third Production Year)

Annual Sales	**630,034,343**	
Annual Costs	**(351,580,117)**	
Depreciation	**(2,977,810)**	
Income Tax	**(12,396,439)**	
Net Earnings	**263,079,977**	
Total Capital Investment		**137,831,826**
ROI	**190.87%**	

11.4.2 Profitability Analysis for 36% Efficiency for Downstream

Cash Flow Summary

Year	Percentage of Design Capacity	Product Unit Price	Sales	Capital Costs	Working Capital	Var Costs	Fixed Costs	Depreciation	Depletion Allowance	Taxible Income	Taxes	Net Earnings	Cash Flow	Cumulative Net Present Value at 20.7%
2013	81%	$8.12	567,030,900	(37,222,600)	(100,609,200)	(311,788,100)	(5,148,900)	(4,835,600)	-	245,258,400	(11,036,600)	234,221,700	101,225,500	101,225,500
2014	90%	$8.12	630,034,300	-	-	(346,431,200)	(5,148,900)	(8,287,100)	-	270,167,100	(12,157,500)	258,009,600	266,296,700	321,852,400
2015	90%	$8.12	630,034,300	-	-	(346,431,200)	(5,148,900)	(5,918,400)	-	272,535,800	(12,264,100)	260,271,700	266,190,100	504,568,700
2016	90%	$8.12	630,034,300	-	-	(346,431,200)	(5,148,900)	(4,226,500)	-	274,227,800	(12,340,200)	261,887,500	266,114,000	655,906,000
2017	90%	$8.12	630,034,300	-	-	(346,431,200)	(5,148,900)	(3,021,800)	-	275,432,400	(12,394,500)	263,038,000	266,059,800	781,263,400
2018	90%	$8.12	630,034,300	-	-	(346,431,200)	(5,148,900)	(3,018,400)	-	275,435,800	(12,394,600)	263,041,200	266,059,600	885,122,100
2019	90%	$8.12	630,034,300	-	-	(346,431,200)	(5,148,900)	(3,021,800)	-	275,432,400	(12,394,500)	263,038,000	266,059,800	971,169,000
2020	90%	$8.12	630,034,300	-	-	(346,431,200)	(5,148,900)	(1,509,200)	-	276,945,000	(12,462,500)	264,482,500	265,991,700	1,042,440,700
2021	90%	$8.12	630,034,300	-	-	(346,431,200)	(5,148,900)	-	-	278,454,200	(12,530,400)	265,923,800	265,923,800	1,101,474,300
2022	90%	$8.12	630,034,300	-	100,609,200	(346,431,200)	(5,148,900)	-	-	278,454,200	(12,530,400)	265,923,800	366,533,000	1,168,887,900

11.4.3 Profitability Analysis for 50% Efficiency for Downstream

General Information

Process Title:	**Manufacturing of Insect Cell Culture VLP-based Influenza Vaccine**
Product:	**API for Influenza Vaccine**
Plant Site Location:	**Research Triangle Park, NC**
Site Factor:	**1.10**
Operating Hours per Year:	**4383**
Operating Days Per Year:	**183**
Operating Factor:	**0.5003**

Product Information

This Process will Yield

	27,310	doses of API for Influenza Vaccine per hour
	655,441	doses of API for Influenza Vaccine per day
	119,700,000	doses of API for Influenza Vaccine per year
Price	**$8.12**	**/doses**

Chronology

Year	Action	Distribution of Permanent Investment	Production Capacity	Depreciation 7 year MACRS	Product Price
2013	Production	100%	81.0%	14.29%	$8.12
2014	Production	0%	90.0%	24.49%	$8.12
2015	Production	0%	90.0%	17.49%	$8.12
2016	Production	0%	90.0%	12.49%	$8.12
2017	Production		90.0%	8.93%	$8.12
2018	Production		90.0%	8.92%	$8.12
2019	Production		90.0%	8.93%	$8.12
2020	Production		90.0%	4.46%	$8.12
2021	Production		90.0%		$8.12
2022	Production		90.0%		$8.12

11.4.3 Profitability Analysis for 50% Efficiency for Downstream

Equipment Costs

Equipment Description		Bare Module Cost
Test Tubes	Fabricated Equipment	$255
1 Shaker Flasks (250 mL)	Fabricated Equipment	$596
6 Shaker Flasks (2 L)	Fabricated Equipment	$5,106
6 Shaker Flasks (3 L)	Fabricated Equipment	$1,969
4 Disposable Bioreactors (50 L)	Fabricated Equipment	$3,552,956
4 Disposable Bioreactors (500 L)	Fabricated Equipment	$3,889,051
4 Disposable Bioreactors (2000 L)	Fabricated Equipment	$15,482,621
4 Reactor Totes (50 L)	Fabricated Equipment	$4,400
4 Reactor Totes (500 L)	Fabricated Equipment	$4,400
4 Reactor Totes (2000 L)	Fabricated Equipment	$4,400
4 Depth Filtration Units	Fabricated Equipment	$39,600
8 Sterile Filtration Units	Fabricated Equipment	$79,200
8 Chromatography Columns	Fabricated Equipment	$1,460,800
4 Disk-Stack Centrifuges	Process Machinery	$3,248,000
4 Viral Inactivation Tanks	Process Machinery	$74,880
16 Holding Tanks	Process Machinery	$111,954
8 Resin Tanks	Process Machinery	$55,977
4 Tangential Flow Filtration Units	Process Machinery	$1,856,000
27 Pumps	Process Machinery	$413,424
9 Heat Exchangers	Process Machinery	$3,229,942
4 Incubators	Storage	$25,752
8 Storage Tanks	Storage	$55,977
8 Media Storage Tanks (200 L)	Storage	$55,977
8 Media Storage Tanks (500 L)	Storage	$97,011
Biosafety Cabinet	Storage	$11,000
18 Bag Holders	Storage	$19,800
Filter Integrity Tester	Spares	$4,500
Bioinactivation System	Spares	$35,000
Tube Fusers	Spares	$15,300
Tube Sealers	Spares	$10,200

11.4.3 Profitability Analysis for 50% Efficiency for Downstream

Variable Cost Summary			
Variable Costs at 100% Capacity:			
General Expenses			
	Selling / Transfer Expenses:		$29,168,257
	Direct Research:		$97,227,522
	Allocated Research:		$374,325,960
	Administrative Expense:		$19,445,504
	Management Incentive Compensation:		$12,153,440
Total General Expenses			$532,320,683
Raw Materials	$0.006396	per doses of API for Influenza Vaccine	$765,658
Byproducts	$0.000000	per doses of API for Influenza Vaccine	$0
Utilities	$0.007410	per doses of API for Influenza Vaccine	$886,971
Total Variable Costs			**$533,973,312**

11.4.3 Profitability Analysis for 50% Efficiency for Downstream

Fixed Cost Summary		
Operations		
	Direct Wages and Benefits	$364,000
	Direct Salaries and Benefits	$54,600
	Operating Supplies and Services	$21,840
	Technical Assistance to Manufacturing	$-
	Control Laboratory	$-
	Total Operations	**$440,440**
Maintenance		
	Wages and Benefits	$1,522,744
	Salaries and Benefits	$380,686
	Materials and Services	$1,522,744
	Maintenance Overhead	$76,137
	Total Maintenance	**$3,502,310**
Operating Overhead		
	General Plant Overhead:	$164,864
	Mechanical Department Services:	$55,729
	Employee Relations Department:	$137,000
	Business Services:	$171,830
	Total Operating Overhead	**$529,423**
Property Taxes and Insurance		
	Property Taxes and Insurance:	$676,775
Other Annual Expenses		
	Rental Fees (Office and Laboratory Space):	$-
	Licensing Fees:	$-
	Miscellaneous:	$-
	Total Other Annual Expenses	**$-**
Total Fixed Costs		**$5,148,948**

11.4.3 Profitability Analysis for 50% Efficiency for Downstream

Investment Summary

Bare Module Costs		
Fabricated Equipment	$24,518,054	
Process Machinery	$8,990,177	
Spares	$65,000	
Storage	$265,517	
Other Equipment	$-	
Catalysts	$-	
Computers, Software, Etc.	$-	
Total Bare Module Costs:		**$33,838,748**
Direct Permanent Investment		
Cost of Site Preparations:	$-	
Cost of Service Facilities:	$-	
Allocated Costs for utility plants and related facilities:	$-	
Direct Permanent Investment		**$33,838,748**
Total Depreciable Capital		
Cost of Contingencies & Contractor Fees	$-	
Total Depreciable Capital		**$33,838,748**
Total Permanent Investment		
Cost of Land:	$-	
Cost of Royalties:	$-	
Cost of Plant Start-Up:	$-	
Total Permanent Investment - Unadjusted		$33,838,748
Site Factor		1.10
Total Permanent Investment		**$37,222,623**

11.4.3 Profitability Analysis for 50% Efficiency for Downstream

Profitability Measures

The Internal Rate of Return (IRR) for this project is	Negative IRR
The Net Present Value (NPV) of this project in 2013 is	$1,649,826,200

ROI Analysis (Third Production Year)

Annual Sales	**875,047,698**	
Annual Costs	**(485,724,929)**	
Depreciation	**(2,977,810)**	
Income Tax	**(17,385,523)**	
Net Earnings	**368,959,436**	
Total Capital Investment		**176,765,455**
ROI	**208.73%**	

11.4.3 Profitability Analysis for 50% Efficiency for Downstream

Cash Flow Summary

Year	Percentage of Design Capacity	Product Unit Price	Sales	Capital Costs	Working Capital	Var Costs	Fixed Costs	Depreciation	Depletion Allowance	Taxible Income	Taxes	Net Earnings	Cash Flow	Cumulative Net Present Value at 20.7%
2013	81%	$8.12	787,542,900	(37,222,600)	(139,542,800)	(432,518,400)	(5,148,900)	(4,835,600)	-	345,040,000	(15,526,800)	329,513,200	157,583,300	157,583,300
2014	90%	$8.12	875,047,700	-	-	(480,576,000)	(5,148,900)	(8,287,100)	-	381,035,700	(17,146,600)	363,889,100	372,176,200	465,931,400
2015	90%	$8.12	875,047,700	-	-	(480,576,000)	(5,148,900)	(5,918,400)	-	383,404,400	(17,253,200)	366,151,200	372,069,600	721,324,800
2016	90%	$8.12	875,047,700	-	-	(480,576,000)	(5,148,900)	(4,226,500)	-	385,096,300	(17,329,300)	367,767,000	371,993,400	932,875,000
2017	90%	$8.12	875,047,700	-	-	(480,576,000)	(5,148,900)	(3,021,800)	-	386,301,000	(17,383,500)	368,917,400	371,939,200	1,108,118,900
2018	90%	$8.12	875,047,700	-	-	(480,576,000)	(5,148,900)	(3,018,400)	-	386,304,400	(17,383,700)	368,920,700	371,939,100	1,253,308,500
2019	90%	$8.12	875,047,700	-	-	(480,576,000)	(5,148,900)	(3,021,800)	-	386,301,000	(17,383,500)	368,917,400	371,939,200	1,373,598,200
2020	90%	$8.12	875,047,700	-	-	(480,576,000)	(5,148,900)	(1,509,200)	-	387,813,600	(17,451,600)	370,362,000	371,871,200	1,473,240,000
2021	90%	$8.12	875,047,700	-	-	(480,576,000)	(5,148,900)	-	-	389,322,800	(17,519,500)	371,803,200	371,803,200	1,555,778,200
2022	90%	$8.12	875,047,700	-	139,542,800	(480,576,000)	(5,148,900)	-	-	389,322,800	(17,519,500)	371,803,200	511,346,100	1,649,826,200

11.4.4 Profitability Analysis for **Pandemic Case**

General Information

Process Title:	Manufacturing of Insect Cell Culture VLP-based Influenza Vaccine
Product:	API for Influenza Vaccine
Plant Site Location:	Research Triangle Park, NC
Site Factor:	1.10
Operating Hours per Year:	4383
Operating Days Per Year:	183
Operating Factor:	0.5003

Product Information

This Process will Yield

	78,653	doses of API for Influenza Vaccine per hour
	1,887,671	doses of API for Influenza Vaccine per day
	344,736,000	doses of API for Influenza Vaccine per year
Price	$5.44	/doses

Chronology

Year	Action	Distribution of Permanent Investment	Production Capacity	Depreciation 7 year MACRS	Product Price
2013	Production	100%	81.0%	14.29%	$8.12
2014	Production	0%	90.0%	24.49%	$8.12
2015	Production	0%	90.0%	17.49%	$8.12
2016	Production	0%	90.0%	12.49%	$8.12
2017	Production		90.0%	8.93%	$8.12
2018	Production		90.0%	8.92%	$8.12
2019	Production		90.0%	8.93%	$8.12
2020	Production		90.0%	4.46%	$8.12
2021	Production		90.0%		$8.12
2022	Production		90.0%		$8.12

11.4.4 Profitability Analysis for Pandemic Case

Equipment Costs

Equipment Description		Bare Module Cost
Test Tubes	Fabricated Equipment	$255
1 Shaker Flasks (250 mL)	Fabricated Equipment	$596
6 Shaker Flasks (2 L)	Fabricated Equipment	$5,106
6 Shaker Flasks (3 L)	Fabricated Equipment	$1,969
4 Disposable Bioreactors (50 L)	Fabricated Equipment	$3,552,956
4 Disposable Bioreactors (500 L)	Fabricated Equipment	$3,889,051
4 Disposable Bioreactors (2000 L)	Fabricated Equipment	$15,482,621
4 Reactor Totes (50 L)	Fabricated Equipment	$4,400
4 Reactor Totes (500 L)	Fabricated Equipment	$4,400
4 Reactor Totes (2000 L)	Fabricated Equipment	$4,400
4 Depth Filtration Units	Fabricated Equipment	$39,600
8 Sterile Filtration Units	Fabricated Equipment	$79,200
8 Chromatography Columns	Fabricated Equipment	$1,460,800
4 Disk-Stack Centrifuges	Process Machinery	$3,248,000
4 Viral Inactivation Tanks	Process Machinery	$74,880
16 Holding Tanks	Process Machinery	$111,954
8 Resin Tanks	Process Machinery	$55,977
4 Tangential Flow Filtration Units	Process Machinery	$1,856,000
27 Pumps	Process Machinery	$413,424
9 Heat Exchangers	Process Machinery	$3,229,942
4 Incubators	Storage	$25,752
8 Storage Tanks	Storage	$55,977
8 Media Storage Tanks (200 L)	Storage	$55,977
8 Media Storage Tanks (500 L)	Storage	$97,011
Biosafety Cabinet	Storage	$11,000
18 Bag Holders	Storage	$19,800
Filter Integrity Tester	Spares	$4,500
Bioinactivation System	Spares	$35,000
Tube Fusers	Spares	$15,300
Tube Sealers	Spares	$10,200

11.4.4 Profitability Analysis for **Pandemic Case**

Variable Cost Summary			
Variable Costs at 100% Capacity:			
General Expenses			
	Selling / Transfer Expenses:		$56,260,915
	Direct Research:		$187,536,384
	Allocated Research:		$722,015,078
	Administrative Expense:		$37,507,277
	Management Incentive Compensation:		$23,442,048
Total General Expenses			$1,026,761,702
Raw Materials	$0.002221	per doses of API for Influenza Vaccine	$765,658
Byproducts	$0.000000	per doses of API for Influenza Vaccine	$0
Utilities	$0.002573	per doses of API for Influenza Vaccine	$886,971
Total Variable Costs			$1,028,414,331

11.4.4 Profitability Analysis for **Pandemic Case**

Fixed Cost Summary		
Operations		
	Direct Wages and Benefits	$364,000
	Direct Salaries and Benefits	$54,600
	Operating Supplies and Services	$21,840
	Technical Assistance to Manufacturing	$-
	Control Laboratory	$-
	Total Operations	$440,440
Maintenance		
	Wages and Benefits	$1,522,744
	Salaries and Benefits	$380,686
	Materials and Services	$1,522,744
	Maintenance Overhead	$76,137
	Total Maintenance	$3,502,310
Operating Overhead		
	General Plant Overhead:	$164,864
	Mechanical Department Services:	$55,729
	Employee Relations Department:	$137,000
	Business Services:	$171,830
	Total Operating Overhead	$529,423
Property Taxes and Insurance		
	Property Taxes and Insurance:	$676,775
Other Annual Expenses		
	Rental Fees (Office and Laboratory Space):	$-
	Licensing Fees:	$-
	Miscellaneous:	$-
	Total Other Annual Expenses	$-
Total Fixed Costs		$5,148,948

11.4.4 Profitability Analysis for **Pandemic Case**

Investment Summary		
Bare Module Costs		
Fabricated Equipment	$24,518,054	
Process Machinery	$8,990,177	
Spares	$65,000	
Storage	$265,517	
Other Equipment	$-	
Catalysts	$-	
Computers, Software, Etc.	$-	
Total Bare Module Costs:		$33,838,748
Direct Permanent Investment		
Cost of Site Preparations:	$-	
Cost of Service Facilities:	$-	
Allocated Costs for utility plants and related facilities:	$-	
Direct Permanent Investment		$33,838,748
Total Depreciable Capital		
Cost of Contingencies & Contractor Fees	$-	
Total Depreciable Capital		$33,838,748
Total Permanent Investment		
Cost of Land:	$-	
Cost of Royalties:	$-	
Cost of Plant Start-Up:	$-	
Total Permanent Investment - Unadjusted		$33,838,748
Site Factor		1.10
Total Permanent Investment		$37,222,623

11.4.4 Profitability Analysis for **Pandemic Case**

Profitability Measures	
The Internal Rate of Return (IRR) for this project is	Negative IRR
The Net Present Value (NPV) of this project in 2013 is	$7,038,423,300

ROI Analysis (Third Production Year)

Annual Sales	2,520,137,370	
Annual Costs	(930,721,846)	
Depreciation	(2,977,810)	
Income Tax	(71,389,697)	
Net Earnings	1,515,048,017	
Total Capital Investment		374,328,533
ROI	404.74%	

11.4.4 Profitability Analysis for **Pandemic Case**

Cash Flow Summary

Percentage of Design Capacity	Product Unit Price	Sales	Capital Costs	Working Capital	Var Costs	Fixed Costs	Depreciation	Depletion Allowance	Taxible Income	Taxes	Net Earnings	Cash Flow	Cumulative Net Present Value at 20.7%
81%	$8.12	2,268,123,600	(37,222,600)	(337,105,900)	(833,015,600)	(5,148,900)	(4,835,600)	-	1,425,123,500	(64,130,600)	1,360,993,000	991,500,000	991,500,000
90%	$8.12	2,520,137,400	-	-	(925,572,900)	(5,148,900)	(8,287,100)	-	1,581,128,400	(71,150,800)	1,509,977,600	1,518,264,700	2,249,383,000
90%	$8.12	2,520,137,400	-	-	(925,572,900)	(5,148,900)	(5,918,400)	-	1,583,497,100	(71,257,400)	1,512,239,800	1,518,158,200	3,291,466,400
90%	$8.12	2,520,137,400	-	-	(925,572,900)	(5,148,900)	(4,226,500)	-	1,585,189,100	(71,333,500)	1,513,855,600	1,518,082,000	4,154,789,600
90%	$8.12	2,520,137,400	-	-	(925,572,900)	(5,148,900)	(3,021,800)	-	1,586,393,700	(71,387,700)	1,515,006,000	1,518,027,800	4,870,027,700
90%	$8.12	2,520,137,400	-	-	(925,572,900)	(5,148,900)	(3,018,400)	-	1,586,397,100	(71,387,900)	1,515,009,200	1,518,027,700	5,462,602,700
90%	$8.12	2,520,137,400	-	-	(925,572,900)	(5,148,900)	(3,021,800)	-	1,586,393,700	(71,387,700)	1,515,006,000	1,518,027,800	5,953,551,400
90%	$8.12	2,520,137,400	-	-	(925,572,900)	(5,148,900)	(1,509,200)	-	1,587,906,300	(71,455,800)	1,516,450,500	1,517,959,700	6,360,284,300
90%	$8.12	2,520,137,400	-	-	(925,572,900)	(5,148,900)	-	-	1,589,415,500	(71,523,700)	1,517,891,800	1,517,891,800	6,697,247,700
90%	$8.12	2,520,137,400	-	337,105,900	(925,572,900)	(5,148,900)	-	-	1,589,415,500	(71,523,700)	1,517,891,800	1,854,997,700	7,038,423,300

11.5 Sensitivity Analysis

11.5.1 Efficacy and Dosing

Presently, live attenuated influenza virus vaccines are considered to be both safe and effective in preventing acute illness and serious complications (Nichol). The effectiveness of the vaccine changes seasonally as the virus evolves, so the WHO must identify strains that will be a threat each influenza season for vaccine manufacturers to target. This annual process requires that the vaccine be reformulated. Influenza vaccines were first manufactured in 1943, and use among high-risk patients has been recommended since 1963. At that point in history, organizations began to collect data to determine vaccine efficacy.

A common method for measuring the efficacy of a vaccine in preventing the virus from infecting the patient is Vaccine Effectiveness (VE). The Center for Disease Control (CDC) of the United States defines VE as the "overall effectiveness of seasonal [influenza] vaccine for preventing laboratory-confirmed [influenza] virus infection ("Influenza..")."

The CDC reported the 2012-2013 VE to be 62% on January 11, 2013 ("Influenza…"). This was reported with a 95% confidence interval of 51% to 71% for the VE. A 95% confidence interval sets the range of VE for which there is a 95% chance of the VE being between for a larger data sample. On February 21, 2013, the CDC reported the VE for the influenza vaccine to be 56% with a 95% confidence interval of 47% to 63% based on a larger data sample ("Influenza…"). Note that this data was collected based solely on 2697 United States patients or varying ages ("Influenza.."). This level of efficacy for the seasonal influenza vaccine is considered low compared to that of

vaccines for Rubella and tetanus, which have efficacies larger than 95% and 90%, respectively (Palache).

The magnitude of these values seems to be consistent over time. Data collected by the NIH shows that for 2011, aggregated vaccine efficacy for patients 18 to 65 was 59% (Hombach). A similar study conducted in 2003 by the NIH revealed a vaccine efficacy of 68% with a 95% confidence interval of 49% to 79% for the 2003 seasonal influenza vaccine for healthy patients age 18 to 65 (Hombach). Despite the slight change the seasonal influenza vaccine, the 95% interval for the vaccine efficacy is consistent year to year.

There is a variance in efficacy between the Type A and Type B influenza strains. The influenza virus is classified into three types: A, B, and C. Types A and B are responsible for epidemic respiratory illness, which is why they are primarily included in the seasonal influenza vaccine. A recent study shows that the human body generally elicits a larger and more effective response to Type B vaccinations. A study released February 18, 2003 proved that the influenza vaccine for Type B had a VE of 78% in European patients (Golec). The vaccine administered was trivalent, and the VE for both Type A strains were only 62% and 42% for the same patients (Golec). This was consistent with data collected by the CDC for United States Patients. The data collected by the CDC showed a vaccine efficacy of 70% for Type B and 55% for Type A ("Influenza…"). Both studies showed an overall VE of 62% for the 2013 influenza vaccine (Golec).

For the influenza vaccine, VE tends to vary depending on the age of the patient group. Data for childhood vaccinations for the influenza virus will regularly record a 90%

vaccine efficacy in the United States (Hombach). Global data disagrees; one study conducted on 247517 patients aged 18 years and younger showed that the vaccine prevented 61% of clinical cases of influenza (Hickling). This is excluding data from the Russia. When data from Russia was included, the vaccine effectively prevented 36% of clinical cases of influenza (Hickling). The discrepancy is most likely due to harsher winter conditions as well as a lower standard of living in the region for which the data was excluded. The data for children shows a large discrepancy from data for the age 65 and older group. The data collected by the CDC for the patients age 65 and up group showed a VE of 9%, far below the 51% to 71% interval presented for the 2012-2013 influenza vaccine for all age groups aggregated ("Influenza…").

Current egg-based vaccine production methods for preventing influenza consist primarily of monomeric hemagglutinin (HA) antigen. There has been no industry or regulatory standard for neuraminidase (NA) antigen in the vaccines. Live viruses contain both HA and NA antigens arranged in a particular pattern giving them biological activity. This may explains why vaccines containing monomeric units of mostly the HA antigen does not elicit a broad level immune response necessary to fully protect the larger population from the influenza virus (Palkonyay).

Virus-like Particles (VLPs) are a noninfectious and non-replicating method of presenting the proper influenza antigens to B and T cells to elicit an immune response. Since VLPs are self-assembling, they correctly fold and display the trimeric HA spikes of a live influenza virus ("Seasonal…"). These self-assembling particles are multivalent because they display multiple antigens as well, which innately gives them a larger immunogenicity than monomeric antigens present in egg-based influenza vaccines.

Joel R Haynes, Senior Director of Vaccine Development at Takeda™, believes that producing VLPs in insect cells will lead to enhanced immunogenicity. This is due to the insect-cell glycosylation patterns and the possibility that the VLPs produced in insect cells also contain a finite quantity of insect cell-derived lipid raft-associated proteins. Patients immune systems will recognize these as foreign bodies and potentially enhance the immunogenicity compared to the live or attenuated virus vaccines (Bodimeade).

Recent studies have shown that VLPs have a higher immunogenicity compared to live or attenuated viruses, as well as recombinant hemagglutinin. One study conducted by Rick A. Bright et al. showed that VLPs produced in insect cells for hemagglutinin (HA), neuraminidase (NA), and influenza core matrix (M1) proteins all elicited an immune response that protected mice from a deadly dose of the H5N1 strain of the avian influenza virus. Both intramuscular (IM) injection and intranasal (IN) injection elicited the proper response to protect the mice from the deadly dose of H5N1. Bright et al. used a hemagglutinin inhibition (HAI) assay to determine the functionality of the antigens produced in the subject mice. An HAI titer greater than 40 is usually considered to be 50% effective in preventing the seasonal influenza virus strain of interest. Both IM and IN injected VLPs in mice had measured HAI titers greater than 40; similar results were obtained in ferrets (Wood). VLP vaccines present a promising and viable future in protecting against the avian influenza strain based on the studies conducted by Bright et al. (Bright 2007)

The WHO has collected data from many clinical trials over the past 20 years to help determine an effective dosing level for the influenza virus; "…it is generally accepted that one dose of vaccine containing 15µg of hemagglutinin per strain per dose

will stimulate hemagglutination-inibition antibody levels consistent with immunity in most primed individuals. (Suresh)" The standard dose administered to patients age 3 years to 65 years old is 0.5mL (Angelmar), therefore a trivalent vaccine must contain 45µg of HA protein per 0.5mL, or 90µg/mL. Young children and adults over 65 years of age must receive a more concentrated dose in order to overcome lower efficacy of the vaccine of such patients. Typically, children 6 months to 35 months of age will receive an influenza vaccine dose of 0.25mL (Angelmar). Patients 65 years and older qualify for Sanofi Pasteur's Fluzone High-Dose®, which contains four times the amount of antigen as other vaccines (Angelmar).

Due to the larger immune response typically affiliated with VLPs, our group has chosen a dosage of 5 micrograms of each strain of influenza antigen per dose. For our trivalent seasonal influenza vaccine, the total dose will be 15 micrograms. The formulation group will concentrate the protein so that the suspension concentration is 5 micrograms of each of the three identified vaccine strain antigens in 0.5mL. Since VLPs have been shown to elicit up to 5-fold larger immune response compared to other vaccination methods (Kushnir), a 3-fold reduction in dose compared to current vaccination dosing should elicit a broad immune response capable of protecting the patient from influenza transmission. Our clinical trials group will confirm the immunogenicity of a dose on an annual basis and assess the need to increase or decrease the dose accordingly.

11.5.2 Gross Revenue

A sensitivity analysis was conducted on production capability to account for unpredictable events, market trends, market demand, production level, and other factors capable of affecting the number of doses produced annually. Unpredictable events can be beneficial or detrimental to gross revenue.

The number of doses produced annually can increase if the amount of protein required to elicit an immune response decreases. Due to antigenic drift, the strain of influenza targeted by an influenza vaccine changes each season. Some strains are more immunogenic to the general population, in which case, it may be plausible for a vaccine to contain less protein. On the contrary, some strains may elicit a smaller than usual immune response, in which case, the protein per dose must be increased. This process is uncommon with the influenza vaccine, and generally the only variable that affects dosing is addition of adjuvants in order to increase the immunogenicity of the VLP influenza vaccine.

The number of batches produced annually will also affect the gross revenue of the company. If the company is able to increase the number of batches produced in a 6 month time period, protein production and therefore the number of doses produced will increase. If a batch becomes contaminated, protein is lost; this decreases the number of doses provided to the market, decreasing gross revenue. If a batch is lost due to contamination, production may need to be extended to fulfill market share. Our company expects to produce 6 batches of each strain, allowing us to produce approximately 86,000,000 doses of trivalent seasonal influenza vaccine. A Gantt chart is included in section 10.1 to show the time period needed to produce 6 batches.

Downstream processing of the VLPs will heavily affect the number of doses sent to market. If the equipment is not running properly, the efficiency of the process decreases, and protein is removed with adventitious materials. Downstream processing equipment must be properly maintained, calibrated, and tested regularly to ensure maximum unit efficiency. The sensitivity of the gross revenue generated by this process is primarily a function of the number of doses produced annually, which is highly dependent upon the downstream process efficiency. Thus, efficiency of VLP retention throughout the purification process is the variable having the greatest effect on gross revenue.

If a pandemic occurs, the government may approve production of a monovalent influenza vaccine. The WHO is responsible for determining the strain of relevance for each year. Our production facility has 4 operating lines, and, typically, three are used for production of a seasonal trivalent vaccine. All 4 lines can be converted to pandemic production lines for production of monovalent vaccines when the WHO declares a pandemic. During a pandemic our facility is capable of accommodating up to four-fold greater vaccine production than the traditional annual trivalent VLP vaccine. Our plant has a greater capacity for transfer to pandemic production mode compared to traditional egg-based plants, since recombinant technology including BEVS produces a much smaller lag time associated with growth and upstream production of the virus than the lag time associated with egg-based production. This change over can occur at the beginning of the next batch cycle, contingent upon R&D providing baculovirus to properly infect 4 production lines with the single pandemic strain identified by the WHO. For a pandemic

situation, it is expected that the selling price of a vaccine will match the buying price of the government during non-pandemic conditions.

Our design process is capable of maximally producing 0.1995 kg of VLP, given a 95% efficiency of the upstream process. In industry, the lowest recovery of VLP is typically occurs downstream in the purification process. For the purposes of our process, we have assumed 95% recovery from fermentation in the upstream process and 36% recovery from the purification process downstream. Producing 6 batches of each strain annually, we are able to produce 86,184,000 doses of trivalent influenza vaccine containing 5 micrograms of each strain. Of the vaccines produced, 77.8% will be sold to the private sector at $8.50 (USD) per dose. The remaining 22.2% of the doses will be sold to government organizations at $6.80 (USD) per dose. The weighted average price per dose sold is $8.12 (USD). These calculations are based off of data collected by the Center for Disease Control (CDC) in 2007 and 2008 (HIDA Market Brief). The profitability analysis for this scenario is found in section 11.4. The calculated Net Present Value is found; to account for potential inefficiency on the downstream side, we conducted a sensitivity analysis for a range of 20% to 50% efficiency on the downstream side. This gives a production range of 47,880,000 to 119,700,000 doses of trivalent 5-microgram influenza vaccine. The net earnings for 86,184,000 is predicted to be $263,079,977 (USD). The spread sheets demonstrating the sensitivity analysis are contained in Appendix B. See the part entitled “Cash Flow” in section 11.4 for more information.

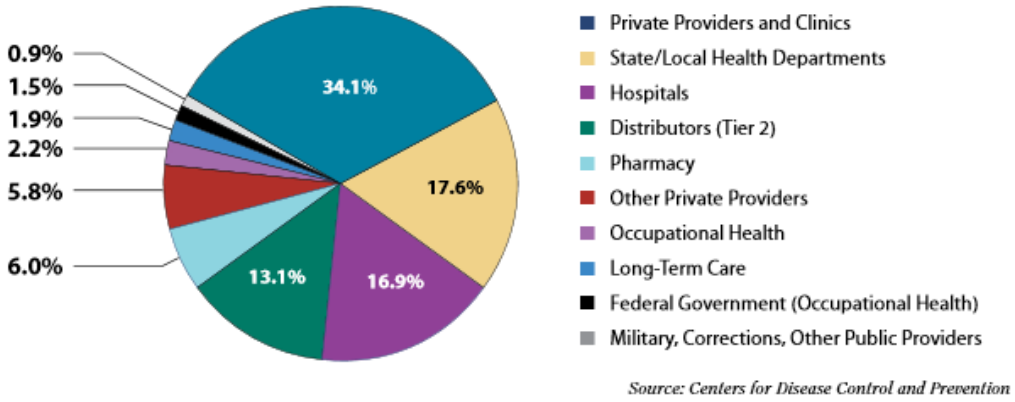

Figure 11.1. This shows the percent of doses supplied to private and public sector. It was used to calculate the weighted value of a dose of influenza vaccine based on the markets to which we supply. We have chosen to supply 77.8% of our doses to the private sector and 22.2% of doses to the government sector. (HIDA Market Brief)

During a pandemic, the facility will run 4 lines in parallel, each producing 6 batches in total. Each line will produce the same strain, allowing a maximum production of 334,736,000 doses of a monovalent 5-microgram influenza vaccine. During pandemic production, it is more likely that the doses will be sold at a government sector price, and even more likely at a reduced government sector price. Our group estimates that the purchasing price per dose will decrease 20% from $6.80 (USD) to $5.44 (USD) in the government sector during a pandemic. This would generate $1,515,048,017 (USD) in net earnings. A more dynamic range of purchasing prices at which the vaccines may be sold can be found in Appendix B section 11.4.

12.0 Conclusions and Recommendations

This proposal has explored in depth the feasibility of starting up a flexible facility to produce an influenza vaccine from SF^2 insect cells. This vaccine company aims to remain a large competitor in the influenza vaccine industry for the United States and European markets by supplying vaccines to fulfill regular demand, as well as having the capability of scaling up during a pandemic. With the use of a non-egg based platform, this new vaccine avoids potential limitations from egg allergies or shortages. In addition, the production of VLPs for use in the vaccine increases the safety and consistency of the product. In regards to the manufacturing facility, the selection of single-use disposable equipment enables increased efficiency of product turnover and flexibility to produce a separate product during the off-season for influenza.

By analyzing the current influenza vaccine market, it was established that the VLP can be produced at approximately $0.01 per dose, which will be sold for an average of $8.12 per dose. It should be noted that this cost does not include formulation and packaging, only manufacturing of the VLP. Based on the economics of facility and production costs in conjunction with projected revenues, it was found that the project would be feasible with a return on investment (ROI) of 190.87% (See Section 11.4). As a result, we recommend this project as a profitable endeavor for the company due to its safety and efficacy.

13.0 Acknowledgements

We would like to acknowledge the help and support of several individuals who made this project possible. We are thankful to all of the industrial consultants who took the time to meet with us and offer advice and guidance during our weekly design meetings.

In particular, we would like to thank Dr. Tiffany Rau for all of her help throughout this entire project. As our primary industrial consultant, Dr. Rau has been extremely helpful in supplying useful references from early on in the process. In addition, she has been very accommodating in taking time out of her busy work schedule to teleconference with us not only during our weekly design meetings, but also during additional meeting times at our request. Dr. Rau has helped to clarify the problem statement, answer our questions, provide feedback and offer advice. We are truly appreciative of Dr. Rau's assistance and would like to acknowledge her part in helping us reach our end goal in completing the project.

Next, we would like to thank Mr. Edward Steve, a retired industrial consultant from the biopharmaceutical field. With his expertise in pharmaceutical products, Mr. Steve was particularly helpful in answering specific questions regarding the equipment and facility design. Specifically, we appreciate his assistance in obtaining price quotes for our manufacturing equipment, as this was one of the larger roadblocks we faced.

We would also like to thank our advisors, Dr. Miriam Wattenbarger and Professor Leonard Fabiano. Dr. Wattenbarger has attended our weekly design meetings, and has been helpful in clarifying the problem statement, and raising concerns we may have initially overlooked. She has also helped make sure we remained on track to meet each

checkpoint along the way, and we are appreciative of all of her support. Professor Fabiano has also offered advice during our weekly design meetings to help move our project forward. We are thankful to both advisors for all of their assistance and encouragement.

In addition, we would like to thank the CBE department at the University of Pennsylvania. As a whole, the department made this project possible by providing us with the opportunity to do so, and providing us with the skill set and knowledge to complete it.

Lastly, we would like to thank our parents for their unconditional love, support and guidance that have brought us to where we are today.

14.0 Bibliography

Angelmar, Reinhard. "Faculty & Research Working Paper: Vaccine Marketing." . N.p., n.d. Web. 1 Apr 2013. <http://www.insead.edu/facultyresearch/research/doc.cfm?did=49167>.

Aucoin, Marc G. "Bioprocessing of Baculoviruses: A Review." *Current Gene Therapy*. 10. (2010): 174-186.

Bernd, Kalbfuss. "Purification of Cell Culture-Derived Human Influenza A Virus by Size-Exclusion and Anion-Exchange Chromatography." *Biotechnology and Bioengineering*. 96.5 (2007): n. page. Print. <http://onlinelibrary.wiley.com/doi/10.1002/bit.21109/pdf>.

Bhatia, R., et al. Insect Cell Physiology. *Cytotechnology* 24: 1-9, 1997.

Bodimeade, Matt. "Seasonal influenza vaccines market to increase at a CAGR of 3.9%." *CompaniesandMarkets.com*. N.p., n.d. Web. 1 Apr 2013. <http://www.companiesandmarkets.com/News/Healthcare-and-Medical/Seasonal-influenza-vaccines-market-to-increase-at-a-CAGR-of-3-9/NI5934>.

Carinhas, Nuno. "Improving baculovirus production at high cell density through manipulation of energy metabolism." Metabolic Engineering (12). (2010): 39-52.

CFR - Code of Federal Regulations Title 21. U.S. Food and Drug Administration, 1 Apr 2012. Web. 1 Apr 2013. <http://www.accessdata.fda.gov/scripts/cdrh/cfdocs/cfcfr/CFRSearch.cfm?CFRPart=211&showFR=1>.

Cox, Manon. "FluBlok, a next generation influenza vaccine manufactured in insect cells." Biologicals 37. (2009): 182-189.

D'Aoust, Marc-Andre. "Review article The production of hemagglutinin-based virus-like particles in plants: a rapid, efficient and safe response to pandemic influenza." Plant Biotechnology Journal (8). (2010): 607-619

Doverskog, Magnus. "Cell Cycle Progression in Serum-Free Cultures of Sf9 Insect Cells: Modulation by Conditioned Medium Factors and Implications for Proliferation and Productivity." *Biotechnol. Prog.*. 16. (2000): 837-846.

"Duke Energy Carolinas, LLC." *Schedule I (NC) Industrial Service*. N.p., 27 Jan 2012. Web. 1 Apr 2013. <http://www.duke-energy.com/pdfs/ncschedulei.pdf>.

Drews, Monika. "The growth and nutrient utilization of the insect cell line Spodoptera frugiperda Sf9 in batch and continuous culture." Journal of Bitoechnology (40). (1995): 187-198.

Eibl, Regine. "Disposable bioreactors: the current state-of-the-art and recommended applications in biotechnology." *Appl Microbiol Biotechnol*. 86:41–49. (2009)

"Fact Sheet: SANOFI PASTEUR, LEADING PROVIDER OF SEASONAL INFLUENZA VACCINES ." . N.p., n.d. Web. 1 Apr 2013. <http://www.sanofipasteur.com/sanofi-pasteur4/sp-media/SP_CORP4/EN/222/1758/EN_Factsheet SP world manufacturer_2011.pdf>.

"Fluzone High-Dose Seasonal Influenza Vaccine." *Centers for Disease Control and Prevention*. N.p., 16 Jul 2012. Web. 1 Apr 2013. <http://www.cdc.gov/flu/protect/vaccine/qa_fluzone.htm>.

Golec, Joseph. "Financial Risk in the Biotechnology Industry." *the National Bureau of Economic Research*. N.p., n.d. Web. 1 Apr 2013. <http://www.nber.org/papers/w13604>.

"Guidance for Industry." *Characterization and Qualification of Cell Substrates and Other Biological Materials Used in the Production of Viral Vaccines for Infectious Disease Indications* . U.S. Department of Health and Human Services, n.d. Web. 1 Apr 2013. <http://www.fda.gov/downloads/BiologicsBloodVaccines/GuidanceComplianceRegulatoryInformation/Guidances/Vaccines/UCM202439.pdf>.

Hickling, Julian. "A review of production technologies for influenza virus vaccines, and their suitability for deployment in developing countries for influenza pandemic preparedness ." *World Health Organization Initiative for Vaccine Research*. (December 2006)

Hombach, Joachim. "Seasonal influenza vaccine policy and utilization: A global perspective." *Influenza Vaccines*. N.p., 13 Jul 2011. Web. 1 Apr 2013. <http://www.who.int/influenza_vaccines_plan/resources/hombach.pdf>.

Huang, Baoying. "Influenza A virus nucleoprotein derived from Escherichia coli or recombinant vaccinia (Tiantan) virus elicits robust cross-protection in mice." Virology Journal (2012) .9 (2012): n. page. Print. <http://www.virologyj.com/content/9/1/322>.

"Influenza vaccine." *Wikipedia*. N.p.. Web. 1 Apr 2013. <http://en.wikipedia.org/wiki/Influenza_vaccine

"Influenza vaccine found to be 62% effective; flu activity widespread in 47 states ." *American Pharmacists Association*. AphA, 11 Jan 2013. Web. 1 Apr 2013. <http://www.pharmacist.com/influenza-vaccine-found-be-62-effective-flu-activity-widespread-47-states>.

Kang, Sang-Moo. "Influenza Vaccines Based on Virus-like Particles." *Virus Research*. 143. (2009): 140-146.

Kost, Thomas A. & Condreay, J Patrick. “Baculovirus as versatile vectors for protein expression in insect and mammalian cells.” Nature Biotechnology. 2005, 23:5

Kost, Thomas A. & Condreay, J Patrick. “Recombinant baculoviruses as expression vectors for insect and mammalian cells.” Current Opinion in Biotechnology. 1999, 10:428-433

Krammer, Florian. "Trichoplusia ni cells (High Five TM) are highly efficient for the production of influenza A virus-like particles: a comparison of two insect cell lines as production platforms for influenza vaccines." Molec. Biotechnol. (2010).45 (2010): 226-234

Kresse, Hedwig. *Influenza vaccine market dynamics*. Nature reviews: Drug Discovery, n.d. Web. 2 Apr 2013.

Kushnir, Natasha. "Virus-like particles as a highly efficient vaccine platform: Diversity oftargets and production systems and advances in clinical development." Vaccine(31).58-83 (2012).

Kwon, M. S., Dojima, T., Park, E. Comparative Characterization of Growth and Recombinant Protein Production among Three Insect Cell Lines with Four Kinds of Serum Free Media. *Biotechnology and Bioprocess Engineering*. 8: 142-6, 2003.

Laukel, Markus. "Disposable Downstream Processing for Clinical Manufacturing." *BioProcess International: DISPOSABLES DOWNSTREAM*. 9. (May 2011): 14-21. Print. <http://www.bioprocessintl.com/journal/supplements/2011/May/Disposable-Downstream-Processing-for-Clinical-Manufacturing-315201>.

Lee, Min-Shi. "A cell-based backup to speed up pandemic influenza vaccine production." Trends in Microbiology (20).3 (2012)

Levine, Howard L.. "Vaccine Manufacturing Facilities of the Future." *BPTC*. BioProcess Technology Consultants, 1 Dec 2010. Web. 2 Apr 2013. <http://www.bptc.com/presentation/vaccine-manufacturing-facilities-future>.

Liu, Hui F. "Recovery and purification process development for monoclonal antibody production." 2.5 (2010): 480-499.

Lohr, V. "New avian suspension cell lines provide production of influenza virus and MVA in serum-free media: Studies on growth, metabolism and virus propagation." Vaccine (27). (2009): 4975-4982.

Manzoli, Lamberto. "The Efficacy of Influenza Vaccine for Healthy Children: A Meta-Analysis Evaluating Potential Sources of Variation in Efficacy Estimates Including Study Quality." *Pediatric Infectious Disease Journal*. 26.2 (2007): 97-106. Print. <http://journals.lww.com/pidj/Abstract/2007/02000/The_Efficacy_of_Influenza_Vaccine_for_Healthy.2.asp&xgt;.

Market Brief: 2007-2008 Influenza Vaccine Production and Distribution. Health Industry Distributors Assocation.

Martin, Jerold. "Regulatory Expectations and Consensus Industry Recommendations for Extractables Testing of Single-Use Process Equipment." . BioPharm International, 2 Nov 2010. Web. 1 Apr 2013.

Mauter, Meagan. "Environmental Life-Cycle Assessment of Disposable Bioreactors." *BioProcess International: DISPOSABLES DECISION-MAKING*. (2009): 18-29.

McPherson, Clifton. "Development of a novel recombinant influenza vaccine in insect cells." Biologicals 36. (2008): 350-353.

Meghrous, Jamal. "Development of a simple and high-yielding fed-batch process for the production of influenza vaccines." Vaccine (28). (2010): 309-316.

Novais, J.L. "Economic Comparison Between Conventional and Disposables-Based Technology for the Production of Biopharmaceuticals."*BIOTECHNOLOGY AND BIOENGINEERING*. 75.2 (2001): 143-153.

O'Brien, Thomas. "Large-Scale, Single-Use Depth Filtration Systems for Mammalian Cell Culture Clarification." *Disposables Suppliers Respond*. BioProcess International, n.d. Web. <http://www.bioprocessintl.com/multimedia/archive/00179/BPI_A_121005SUPAR07_179210a.pdf>.

Ohki, Takashi. "Improvement of the yields of recombinant actin and myosin V–HMM in the insect cell/baculovirus system by the addition of nutrients to the high-density cell culture." J Muscle Res Cell Motil. (2012)

Osterholm, MT. "Efficacy and effectiveness of influenza vaccines: a systematic review and meta-analysis.." 12.1 (2012): 36-44. Print. <http://www.ncbi.nlm.nih.gov/pubmed/22032844>.

Palache, Abraham. "Seasonal influenza vaccine provision in 157 countries (2004–2009) and the potential influence of national public health policies." 29.51 (2011): n. page. Print. <http://www.sciencedirect.com/science/article/pii/S0264410X11016379>.

Palkonyay, L. "WHO meeting on the role of neuraminidase in inducing protec- tive immunity against influenza infection." *Conference Report*. Vaccine (27). (2008): 6366-6369

Pantua, Homer. "Requirements for the Assembly and Release of Newcastle Disease Virus-Like Particles." *Journal of Virology*. 80.2 (2006): 11062–11073.

PCAST. *Report to the President on Reengineering the Influenza Vaccine Production Enterprise to Meet the Challenges of Pandemic Influenza*. PCAST 2010. Web.

Popescu, G., et al. Optical imaging of cell mass and growth dynamics. *Am J Physiol Cell Physiol* 295: C538-44, 2008.

"Protein Concentration and Diafiltration by Tangential Flow Filtration." *Millipore*. N.p.. Web. 1 Apr 2013. <http://www.millipore.com/publications.nsf/a73664f9f981af8c852569b9005b4eee/ab3ba3a9d06cc6f185256bd10068b0de/$FILE/TB032.pdf>.

Pushko, Peter. "Influenza virus-like particle can accommodate multiple subtypes of hemagglutinin and protect from multiple influenza types and subtypes." Vaccine (29). (2011): 5911-5918.

Rausch, Mareike. "Increase of Protein Yield in High Five Cells in a Single-Use Perfusion Bioreactor by Medium Replacement." *Chemie Ingenieur Technik 2013*. 85.1-2 (2013): 111-117. Print. <www.cit-journal.com>.

Reuveny, S. "Communications to the Editor Production of Recombinant Proteins in High-Density Insect Cell Cultures ." Biotechnology and Bioengineering (42). (1993): 235-239.

Ries, Christoph. "Short Communication A shaken disposable bioreactor system for controlled insect cell cultivations at milliliter-scale." Eng. Life Sci. (10).1 (2009): 75-79.

Rueda, Paloma. "Effect of different baculovirus inactivation procedures on the integrity and immunogenicity of porcine parvovirus-like particles." Vaccine(19). (2001): 726-734.

Sandstorm, Craig. "Disposable vs. Traditional Equipment — A Facility-Wide View." *SBE Special Supplement: Disposables*. (2009): n. page. Print. <www.aiche.org/cep>.

"Seasonal Influenza Vaccine Dosage & Administration." *Centers for Disease Control and Prevention*. N.p., 16 Aug 2011. Web. 1 Apr 2013. <http://www.cdc.gov/flu/about/qa/vaxadmin.htm>.

Sinclair, Monge, . "Concept Facility Based on Single-Use Systems, Part 2." *BioProcess International: DISPOSABLES: Cost Comparison*. (October 2005)

Sinclair, Monge. "Quantitative Economic Evaluation of Single Use Disposables in Bioprocessing." Biopharm Services. Volume 06

Suresh. "HIGHLIGHTS FROM THE WORLD'S LARGEST BIOTECH GATHERING." *Global Biotech Industry Recovers*. N.p.. Web. 1 Apr 2013. <http://www.biospectrumindia.com/biospecindia/news/157182/global-biotech-industry-recovers>.

"The efficacy, effectiveness and cost-effectiveness of inactivated influenza virus vaccines." Vaccine 21. (2003): 1769-1775. Print.

<http://download.thelancet.com/flatcontentassets/H1N1-flu/vaccination/vaccination-22.pdf>.

Ulmer, Jeffrey B. "NATURE BIOTECHNOLOGY VOLUME 24 NUMBER 11 NOVEMBER 2006 1377 Vaccine manufacturing: challenges and solutions." Nature Biotechnology (24).11 (2006).

"UniFuge Single Use Centrifuge." *Carr Centritech Separation Systems*. Pneumatic Scale Angelus, n.d. Web. <http://www.slideshare.net/DANATPSA/unifuge-single-use-centrifuge>.

"Utility Rates, Deposits & Fees." *City of Raleigh*. N.p., 26 Sep 2012. Web. 1 Apr 2013. <http://www.raleighnc.gov/services/content/FinUtilityBilling/Articles/UtilityBillingDepositFees.html

Vicente, Tiago . "Large-scale production and purification of VLP-based vaccines." *Journal of Invertebrate Pathology*. 107. (2011): S42–S48.

"What You Should Know for the 2012-2013 Influenza Season." *Centers for Disease Control and Prevention*. Centers for Disease Control and Prevention, 15 March 2013. Web. 1 Apr 2013. <http://www.cdc.gov/flu/about/season/flu-season-2012-2013.htm>.

Willyard, Cassandra. "Cell-based vaccines yield only modest advances for seasonal flu." Nature Medicine (19).1 (2013)

Wolff, Michael. "Review:Downstream Processing: From Egg to Cell Culture-Derived Influenza Virus Particles." *Chem. Eng. Technology*. 31.6 (2008): 846-857.

Whitford, William, G. "Single-Use Systems as Principal Components in Bioproduction." *BioProcess International*. BioProcess Technical.December 2010 (2010): 34:42.

Appendix A – Calculations

Growth Rate

The doubling time of an insect cell in batch suspension culture is given by

$$-\tau_D = \frac{ln2}{\mu_s} \qquad \text{(A.1)}$$

where μ_s is the growth rate of the SF^2 cells during the exponential growth phase (Figure A.1), defined as the increase in cell mass per unit cell mass per unit time. In our following calculations, we used a specific growth rate of $0.034hr^{-1}$ as a reasonable estimate of the average growth rate of the SF^2 cells. This number was obtained from studies stating maximal growth rates of Sf9 cells, from which SF^2 cells are derived. Experimentally, SF^2 cells grow much more quickly than Sf9 cells, suggesting that our estimate, while on the upper end of Sf9 growth rates, is conservative when considering SF^2 cells. (Cox 2009)

Growth Curve

Figure A.1 depicts a typical growth curve for cells in suspension culture, such as the insect-derived SF^2 cell line.

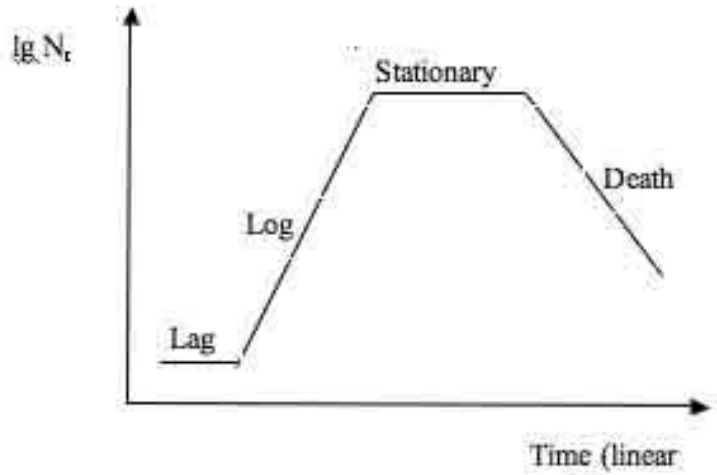

Figure A.1. Cell growth curve consisting of four distinct phases, lag, log, stationary, and death. The log of the number of cells or cell concentration(y-axis) is plotted against linear time (x-axis). This basic model of cell growth holds true for most cell types. From Börje Lindström, LTU, Sweden

The typical growth curve is split into four distinct phases: lag, log, stationary, and death. The amount of time a suspension culture will remain in each phase is dependent upon the cell line. The lag phase occurs when a high density is diluted and the cells must adapt to the new conditions and a lowered density. This lag may have to do with soluble factors being less concentrated than in the high density culture or an adjustment to the change in medium composition. After readjusting to their new environment, the cells enter a logarithmic (exponential) growth phase, characterized by equation A.1, which we assume the cells maintain throughout our process for simplicity, a reasonable assumption at lower cell density and in fed-batch cultures with tight pH, osmolality, and nutrient control. After reaching a critical cell density where the medium is depleted of many nutrients or the cells are too crowded to grow, the cells enter the stationary growth phase, where the cell density changes very little and cells are grow slowly or senesce rather than divide. Finally, the nutrients are fully depleted from the medium if not replenished, and the cells begin to die at an exponential rate. We avoided the modeling of the lag, stationary, and death phases of cell proliferation, since our process aims to maintain cells in the exponential growth phase through specially configured medium, supplementation, and minimizing the time spent in each bioreactor.

When infected with Baculovirus, the ^{SF2} cells will reach the death phase soon after induction, which is the method of VLP production and release into the medium. Therefore, the death phase is an important factor in designing the infection and harvest protocols.

VLP Production & Yield

The VLP production rate is a function of several key factors: cell line, cell density, nutrient concentration, and the recombinant protein itself. The VLP works by combining two essential proteins that associate at the cell surface to induce each budding event. The HA protein will be produced predominantly, expressed under an earlier promoter to insure its greater production levels, and the M1 matrix protein will be produced in smaller amounts to coordinate budding. As discussed previously, these two proteins are essential and sufficient to induce budding events in SF^2 cells to create influenza VLPs (Section 2.1)

Protein production in SF^2 cells will be at minimum the production level attained in High-Five cells, from which protein production characteristics were derived and transferred into Sf9 cells. Thus, a conservative estimate of the specific HA production is on the order of $15mg/10^9$ cells. This figure takes into account the fed-batch operating mode and escalated protein production levels of SF^2 cells compared to Sf9 cells. The enhanced high density culture cell viability and, therefore, the volumetric protein production is dependent upon the optimization of the growth medium and feed medium as well as the TOI and MOI. With all of these parameters optimized in the laboratory research stage, we can expect a specific HA yield of $15mg/10^9$ cells to be associated with VLPs (Rausch 2012).

A key assumption in the mass balance is that cells are on average 300pg of dry mass, which is a good assumption for metabolically normal eukaryotes. (Popescu 2008). Furthermore, it was assumed that this dry mass accounts for about 30% of the cell weight, certainly a liberal estimate. From these values, dry mass and wet mass were

calculated to determine the loss of water from the process due to centrifugation for biomass removal.

Sf^2 cells consume glucose at a rate of 2.07 pmol/cell-day based on an averaged data set from a number of metabolic measurement literature for insect cells. This value led to an estimated 53mM glucose concentration required to sustain the cells for the 3.32 days spent in each fermentation culture. This is the same concentration as in prepared EXCELL-405 medium from Sigma Aldrich, necessitating no additional glucose purchase or medium formulation. Medium utilization was estimated based on recommendations from Sigma Aldrich that medium should be changed every 3-4 days. This data implies a maximum of five days for medium use, so medium consumption was estimated to be about 66.4% on average.

Appendix- Batch Times

Based on the SF^2 cell growth profile, it was found that SF^2 cells maintain a doubling time between 18-24 hours in suspension culture during log phase growth conditions. Both the lag and stationary phases are neglected, and for the most conservative analysis, 24 hours is used as the doubling time.

For batch time estimations, it was desired to reach the maximum allowable cell density for protein production in the 2000L fermenter, which is 1.40×10^7 cells/mL. To minimize the scale-up time, the cells will grow at a ten-fold in each reactor. The growth of cells in the log phase is given by

$$X = X_0 2^{\frac{t}{\tau_d}}$$

where X is the final cell density, X_0 is the initial cell density, t is the time spent in the reactor, and τ_d is the doubling time. Based on this, it was found that time for each scale-up is 3.32 days. Total scale-up time adds up to 19.93 days, and the initial cell density needed in the first 100 mL shake flask is 2.80×10^5 cells/mL

Reactor	Filled Volume Size (mL)	Cell density (initial) (cells/mL)	# cells (initial)	Cell density (final) (cells/mL)	# cells (final)	Time (hrs)	Time (days)
250 mL	50	2.80E+05	1.40E+07	2.80E+06	1.40E+08	79.73	3.32
2 L	250	5.60E+05	1.40E+08	5.60E+06	1.40E+09	79.73	3.32
3 L	1000	1.40E+06	1.40E+09	1.40E+07	1.40E+10	79.73	3.32
50 L	10000	1.40E+06	1.40E+10	1.40E+07	1.40E+11	79.73	3.32
500 L	100000	1.40E+06	1.40E+11	1.40E+07	1.40E+12	79.73	3.32
2000 L	1000000	1.40E+06	1.40E+12	1.40E+07	1.40E+13	79.73	3.32
					Total	478.36	19.93

To find the total batch time for the upstream process, time for vial thawing, harvest time after cell growth, and time to transfer the cell broth between reactors must be

accounted for as well. Furthermore, this table accounts for only the batch time required for cell growth. Additional time must be provided (an additional two days) at the end of each batch cycle for virus production. This additional step results in a single-batch time of about 22 days. Addition of virus occurs ideally one day after beginning the 2000L bioreactor fermentation. Upon virus addition, the medium is supplemented with 100L additional medium, bringing the final reaction volume to 1000L and putting the culture in fed-batch mode. This supplementation is associated with a dramatic increase in the production of recombinant baculovirus product and sustains the culture in the protein production phase until the harvest time (Carinhas 2010). The harvest time has similarly been optimized by the research team to be 72 hours post-infection. This timing insures that the maximum number of cells has engaged in protein production and that the VLPs are not subject to proteases and other enzymes that result in degradation (Bright 2007).

Appendix -- Toxicology Studies

The toxicological properties of the VLPs and any process reagents must be tested to insure adequate product safety. Laboratory studies will determine that each batch is completely void of remaining baculovirus particles and unable to form plaques. The first few batches produced of each HA strain VLP will be subjected to animal testing to determine any deleterious effects of over vaccination and the specific dose response to influenza vaccination on a number of VLP basis. A maximum dose before toxicity will be determined in several species to prevent potential overdosing of humans in clinical trials.

Proof of Concept Studies

Each stage of the downstream purification process will undergo rigorous validation to insure adequate immunogenicity and utmost safety of the VLP product and to insure that none of the unit operation deactivates the VLPs or renders them unable to vaccinate. In a laboratory scale, VLP product from fermentation will be subjected to a variety of chromatography buffer preparations to insure the VLPs remain intact in processing buffers. They will also be subjected to differing concentrations of detergents for baculovirus deactivation to reassess the effects on immunogenicity. Finally, the VLP products will be tested in animals for efficacy and undergo the appropriate clinical trials in order to garner FDA approval and to demonstrate the validity of VLP vaccines.

Vaccine Formulation

Upon final preparation of the VLPs in freeze-dried form, the formulation team will determine the dose requirements for the specific strains of any particular influenza season based on vaccine studies and laboratory analysis. This team will also be responsible to determine the minimum effective vaccine dose and the dose response curve for a given HA variant. This data will be cross-referenced with the WHO database each year to determine the required production capacity and operating conditions to best fulfill the demand for influenza vaccines. The vaccine formulation, mixing of strains, dosing, and stabilization for transport and sale are outside the scope of this manufacturing feasibility study.

Heat Exchanger Calculations

	Water	Medium				
T_i	47	4				
T_f	14	27		Ad		
μ	0.000404	0.000404	Pa*S	ui	0.042589438	m/s
ρ	1000	1000	kg/m3	Aci	0.0002935	
k	0.58	0.58	W/mK	Nt	1.029741615	
Di	0.01905			L	1.5	m
Do	0.0254			At	0.11969468	
Ai	0.08977101			Np	4.054970786	Assume Ft = 1
Am	0.069344305					

Q		0.00075	m3/s
uo	0.05	m/s	
Nu	1.441086794		
hi	43.87560842		
Nuo	3.582558523		
ho	81.80645447		
Uo est	10		
Qdot	72.105		
TLM	14.42695041		
Ad	0.499793775		
1/U	0.047612917		
Uo	21.00270411		
Qwater	0.886738088	kg/s	
	53.20428531		

Purchase Cost:

Cb	$22,226.87
Fp	0.983253195
Fm	3.514991792
Fl	1.42
Cp	$109,082.82

Purchase Cost Calculations:

To determine the purchase cost of the heat exchangers that will be used in this facility, the following equations were used:

$$C_P = F_P F_M F_L C_B$$

Where,

$$F_M = a + \left(\frac{A}{100}\right)^b$$

$$F_P = 0.9803 + 0.018\left(\frac{P}{100}\right) + 0.0017\left(\frac{P}{100}\right)^2$$

and F_L (the length correction factor), was determined by extrapolating for a tube length of 5 ft.

Appendix A – Labor Force and Structure

Based on influenza vaccine production of six months, with approximately two months of research and development, four months of labor are needed for the plant's production. For each of the three influenza strains, two operators will be needed to operate the upstream process, and two operators will be needed to operate the downstream process. Assuming the plant operates daily in three 8-hour shifts, with operators working 5-days a week, approximately 51 operators will need to be hired.

Months of operation	4
Days of operation	120
Shifts per day	3
Total shifts	360
Upstream process operators per shift	6
Downstream process operators per shift	6
Total employees per day	36
Days/shifts worked per floor engineer	85.7
Total floor engineers	51

Salaries were estimated using the average salaries of manufacturing pharmaceutical employees in Raleigh, North Carolina. The contract specialist manager is only paid for 40 hours a month, and contractors and operators are paid an hourly wage for 160 hours a week. For the contract specialist manager, an average of 3 hours of overtime per month are taken into account, and for contractors and operators, 12 hours of overtime per month are taken into account.

Appendix A – Labor Force and Structure

Position	Number of Positions	Salary (k)	Hourly	Hours per month	Overtime per month	Total (k)
Quality Assurance group						
Contract Specialists	4	53				212
Contract Specialist Manager	1		32	40	3	17.09
Process Engineering group						
Head engineer-supervisory physical scientist	1	82				82.00
Systems engineer	3	70				210.00
Floor engineers	5	55				275.00
Operators	51		38.46	160	12	4189.68
Procurement group						
Warehouse engineering manager	1	37				37.00
Contractors	5		22	160	12	234.96
Total (annual)	71					1752.58
Total (4 months of operation)	71					584.19

Appendix A

Cost Analysis of Single-Use Disposable Facility vs. Traditional Stainless Steel Facility

Using a 7-year MACRS table, the cost of each facility was estimated based on depreciable capital, profits, and taxes. Cost estimations were evaluated based on a monoclonal antibody process in a 2000L fermentation scale from 2012 (Sinclair, Monge).

Doses	100 million
Cost per dose	$8.12
Nominal Interest Rate	20.7%
Income Tax Rate	4.5%
Dollars to Euros Exchange Rate	1.3

Single-Use Disposable Facility Cost (in millions of dollars)

	Investment Cost:	19,670,3555 Euros					
Year	Total Depreciable Capital	Depreciation	Profit	Net Earnings	Discounted Cash Flow	Cash Flow (PV)	Cumulative PV
1	25.6			0	-25.6	-21.2	-21.2
2		3.65	812	772	776	532	511
3		6.26	812	769	776	441	952
4		4.47	812	771	776	365	1320
5		3.19	812	772	776	303	1620
6		2.28	812	772	776	251	1870
7		2.28	812	773	776	208	2080
8		2.28	812	773	776	172	2250
9			812	775	775	143	2390
10			812	775	775	118	2510

Traditional Stainless Steel Facility Cost (in millions of dollars)

	Investment Cost:	24,970,532 Euros					
Year	Total Depreciable Capital	Depreciation	Profit	Net Earnings	Discounted Cash Flow	Cash Flow (PV)	Cumulative PV
1	32.46			0	-32.5	-26.9	-26.9E
2		4.64	812	771	776	532	506
3		7.95	812	768	776	441	947
4		5.68	812	770	776	365	1310
5		4.05	812	772	776	303	1620
6		2.90	812	773	776	251	1870
7		2.90	812	773	776	208	2070
8		2.90	812	773	776	172	2250
9			812	775	775	143	2390
10			812	775	775	118	2510

Appendix B – Sensitivity Analysis

20% Downstream Efficiency

Change in Dose due to Efficacy

Percent Change in Dose	Dose (micrograms)	Forcasted Protein Production per Batch (kg)	Forecasted Number of Batches	Forecasted Doses	$8.5/dose private sector Gross Private Revenue ($ USD)	$6.8/dose from Gov.'t Gross Gov.'t Revenue ($ USD)
-20%	4	0.0399	6	59,850,000.00	508,725,000.00	406,980,000.00
-15%	4.25	0.0399	6	56,329,411.76	478,800,000.00	383,040,000.00
-10%	4.5	0.0399	6	53,200,000.00	452,200,000.00	361,760,000.00
-5%	4.75	0.0399	6	50,400,000.00	428,400,000.00	342,720,000.00
0%	5	0.0399	6	47,880,000.00	406,980,000.00	325,584,000.00
5%	5.25	0.0399	6	45,600,000.00	387,600,000.00	310,080,000.00
10%	5.5	0.0399	6	43,527,272.73	369,981,818.18	295,985,454.55
15%	5.75	0.0399	6	41,634,782.61	353,895,652.17	283,116,521.74
20%	6	0.0399	6	39,900,000.00	339,150,000.00	271,320,000.00

Change in Number of Batches

Change in Number of Batches	Dose (micrograms)	Forcasted Protein Production per Batch (kg)	Forecasted Number of Batches	Forecasted Doses	Gross Private Revenue ($ USD)	Gross Gov.'t Revenue ($ USD)
-2	5	0.0399	4	31,920,000.00	271,320,000.00	217,056,000.00
-1	5	0.0399	5	39,900,000.00	339,150,000.00	271,320,000.00
0	5	0.0399	6	47,880,000.00	406,980,000.00	325,584,000.00
1	5	0.0399	7	55,860,000.00	474,810,000.00	379,848,000.00
2	5	0.0399	8	63,840,000.00	542,640,000.00	434,112,000.00

Appendix B – Sensitivity Analysis

20% Downstream Efficiency

Change in Selling Price

Percent Change in Selling Price	Dose (micro grams)	Forcasted Protein Production per Batch (kg)	Forecasted Number of Batches	Forecasted Doses	Private Sector Selling Price	Gov.'t Sector Selling Price	Gross Private Revenue ($ USD)	Gross Gov.'t Revenue ($ USD)
-20%	5	0.0399	6	47,880,000.00	6.8	5.44	325,584,000.00	260,467,200.00
-15%	5	0.0399	6	47,880,000.00	7.225	5.78	345,933,000.00	276,746,400.00
-10%	5	0.0399	6	47,880,000.00	7.65	6.12	366,282,000.00	293,025,600.00
-5%	5	0.0399	6	47,880,000.00	8.075	6.46	386,631,000.00	309,304,800.00
0%	5	0.0399	6	47,880,000.00	8.5	6.8	406,980,000.00	325,584,000.00
5%	5	0.0399	6	47,880,000.00	8.925	7.14	427,329,000.00	341,863,200.00
10%	5	0.0399	6	47,880,000.00	9.35	7.48	447,678,000.00	358,142,400.00
15%	5	0.0399	6	47,880,000.00	9.775	7.82	468,027,000.00	374,421,600.00
20%	5	0.0399	6	47,880,000.00	10.2	8.16	488,376,000.00	390,700,800.00

Pandemic Scale-Up

Dose (micrograms)	Forcasted Protein Production per Batch (kg)	Forecasted Number of Batches	Forecasted Doses	Gov.'t Sector Selling Price	Gross Gov.'t Revenue ($ USD)
5	0.0399	24	191,520,000.00	5.44	1,041,868,800.00
5	0.0399	24	191,520,000.00	5.78	1,106,985,600.00
5	0.0399	24	191,520,000.00	6.12	1,172,102,400.00
5	0.0399	24	191,520,000.00	6.46	1,237,219,200.00
5	0.0399	24	191,520,000.00	6.8	1,302,336,000.00
5	0.0399	24	191,520,000.00	7.14	1,367,452,800.00
5	0.0399	24	191,520,000.00	7.48	1,432,569,600.00
5	0.0399	24	191,520,000.00	7.82	1,497,686,400.00
5	0.0399	24	191,520,000.00	8.16	1,562,803,200.00

Appendix B – Sensitivity Analysis

36% Downstream Efficiency

Change in Dose due to Efficacy

I.) Change in Dose due to Efficacy		.			$8.5/dose private sector	$6.8/dose from Gov.'t
Percent Change in Dose	Dose (micrograms)	Forcasted Protein Production per Batch (kg)	Forecasted Number of Batches	Forecasted Doses	Gross Private Revenue ($ USD)	Gross Gov.'t Revenue ($ USD)
-20%	4	0.07182	6	107,730,000.00	915,705,000.00	732,564,000.00
-15%	4.25	0.07182	6	101,392,941.18	861,840,000.00	689,472,000.00
-10%	4.5	0.07182	6	95,760,000.00	813,960,000.00	651,168,000.00
-5%	4.75	0.07182	6	90,720,000.00	771,120,000.00	616,896,000.00
0%	5	0.07182	6	86,184,000.00	732,564,000.00	586,051,200.00
5%	5.25	0.07182	6	82,080,000.00	697,680,000.00	558,144,000.00
10%	5.5	0.07182	6	78,349,090.91	665,967,272.73	532,773,818.18
15%	5.75	0.07182	6	74,942,608.70	637,012,173.91	509,609,739.13
20%	6	0.07182	6	71,820,000.00	610,470,000.00	488,376,000.00

Change in Number of Batches

Change in Number of Batches	Dose (micrograms)	Forcasted Protein Production per Batch (kg)	Forecasted Number of Batches	Forecasted Doses	Gross Private Revenue ($ USD)	Gross Gov.'t Revenue ($ USD)
-2	5	0.07182	4	57,456,000.00	488,376,000.00	390,700,800.00
-1	5	0.07182	5	71,820,000.00	610,470,000.00	488,376,000.00
0	5	0.07182	6	86,184,000.00	732,564,000.00	586,051,200.00
1	5	0.07182	7	100,548,000.00	854,658,000.00	683,726,400.00
2	5	0.07182	8	114,912,000.00	976,752,000.00	781,401,600.00

Appendix B – Sensitivity Analysis

36% Downstream Efficiency

Change in Selling Price

Percent Change in Selling Price	Dose (micro grams)	Forcasted Protein Production per Batch (kg)	Forecasted Number of Batches	Forecasted Doses	Private Sector Selling Price	Gov.'t Sector Selling Price	Gross Private Revenue ($ USD)	Gross Gov.'t Revenue ($ USD)
-20%	5	0.07182	6	86,184,000.00	6.8	5.44	586,051,200.00	468,840,960.00
-15%	5	0.07182	6	86,184,000.00	7.225	5.78	622,679,400.00	498,143,520.00
-10%	5	0.07182	6	86,184,000.00	7.65	6.12	659,307,600.00	527,446,080.00
-5%	5	0.07182	6	86,184,000.00	8.075	6.46	695,935,800.00	556,748,640.00
0%	5	0.07182	6	86,184,000.00	8.5	6.8	732,564,000.00	586,051,200.00
5%	5	0.07182	6	86,184,000.00	8.925	7.14	769,192,200.00	615,353,760.00
10%	5	0.07182	6	86,184,000.00	9.35	7.48	805,820,400.00	644,656,320.00
15%	5	0.07182	6	86,184,000.00	9.775	7.82	842,448,600.00	673,958,880.00
20%	5	0.07182	6	86,184,000.00	10.2	8.16	879,076,800.00	703,261,440.00

Pandemic Scale-Up

Dose (micrograms)	Forcasted Protein Production per Batch (kg)	Forecasted Number of Batches	Forecasted Doses	Gov.'t Sector Selling Price	Gross Gov.'t Revenue ($ USD)
5	0.07182	24	344,736,000.00	5.44	1,875,363,840.00
5	0.07182	24	344,736,000.00	5.78	1,992,574,080.00
5	0.07182	24	344,736,000.00	6.12	2,109,784,320.00
5	0.07182	24	344,736,000.00	6.46	2,226,994,560.00
5	0.07182	24	344,736,000.00	6.8	2,344,204,800.00
5	0.07182	24	344,736,000.00	7.14	2,461,415,040.00
5	0.07182	24	344,736,000.00	7.48	2,578,625,280.00
5	0.07182	24	344,736,000.00	7.82	2,695,835,520.00
5	0.07182	24	344,736,000.00	8.16	2,813,045,760.00

Appendix B – Sensitivity Analysis

50% Downstream Efficiency

Change in Dose due to Efficacy

I.) Change in Dose due to Efficacy		.			$8.5/dose private sector	$6.8/dose from Gov.'t
Percent Change in Dose	Dose (micrograms)	Forcasted Protein Production per Batch (kg)	Forecasted Number of Batches	Forecasted Doses	Gross Private Revenue ($ USD)	Gross Gov.'t Revenue ($ USD)
-20%	4	0.09975	6	149,625,000.00	1,271,812,500.00	1,017,450,000.00
-15%	4.25	0.09975	6	140,823,529.41	1,197,000,000.00	957,600,000.00
-10%	4.5	0.09975	6	133,000,000.00	1,130,500,000.00	904,400,000.00
-5%	4.75	0.09975	6	126,000,000.00	1,071,000,000.00	856,800,000.00
0%	5	0.09975	6	119,700,000.00	1,017,450,000.00	813,960,000.00
5%	5.25	0.09975	6	114,000,000.00	969,000,000.00	775,200,000.00
10%	5.5	0.09975	6	108,818,181.82	924,954,545.45	739,963,636.36
15%	5.75	0.09975	6	104,086,956.52	884,739,130.43	707,791,304.35
20%	6	0.09975	6	99,750,000.00	847,875,000.00	678,300,000.00

Change in Number of Batches

Change in Number of Batches	Dose (micrograms)	Forcasted Protein Production per Batch (kg)	Forecasted Number of Batches	Forecasted Doses	Gross Private Revenue ($ USD)	Gross Gov.'t Revenue ($ USD)
-2	5	0.09975	4	79,800,000.00	678,300,000.00	542,640,000.00
-1	5	0.09975	5	99,750,000.00	847,875,000.00	678,300,000.00
0	5	0.09975	6	119,700,000.00	1,017,450,000.00	813,960,000.00
1	5	0.09975	7	139,650,000.00	1,187,025,000.00	949,620,000.00
2	5	0.09975	8	159,600,000.00	1,356,600,000.00	1,085,280,000.00

Appendix B – Sensitivity Analysis

50% Downstream Efficiency

Change in Selling Price

Percent Change in Selling Price	Dose (micro grams)	Forcasted Protein Production per Batch (kg)	Forecasted Number of Batches	Forecasted Doses	Private Sector Selling Price	Gov.'t Sector Selling Price	Gross Private Revenue ($ USD)	Gross Gov.'t Revenue ($ USD)
-20%	5	0.09975	6	119,700,000.00	6.8	5.44	813,960,000.00	651,168,000.00
-15%	5	0.09975	6	119,700,000.00	7.225	5.78	864,832,500.00	691,866,000.00
-10%	5	0.09975	6	119,700,000.00	7.65	6.12	915,705,000.00	732,564,000.00
-5%	5	0.09975	6	119,700,000.00	8.075	6.46	966,577,500.00	773,262,000.00
0%	5	0.09975	6	119,700,000.00	8.5	6.8	1,017,450,000.00	813,960,000.00
5%	5	0.09975	6	119,700,000.00	8.925	7.14	1,068,322,500.00	854,658,000.00
10%	5	0.09975	6	119,700,000.00	9.35	7.48	1,119,195,000.00	895,356,000.00
15%	5	0.09975	6	119,700,000.00	9.775	7.82	1,170,067,500.00	936,054,000.00
20%	5	0.09975	6	119,700,000.00	10.2	8.16	1,220,940,000.00	976,752,000.00

Pandemic Scale-Up

Dose (micrograms)	Forcasted Protein Production per Batch (kg)	Forecasted Number of Batches	Forecasted Doses	Gov.'t Sector Selling Price	Gross Gov.'t Revenue ($ USD)
5	0.09975	24	478,800,000.00	5.44	2,604,672,000.00
5	0.09975	24	478,800,000.00	5.78	2,767,464,000.00
5	0.09975	24	478,800,000.00	6.12	2,930,256,000.00
5	0.09975	24	478,800,000.00	6.46	3,093,048,000.00
5	0.09975	24	478,800,000.00	6.8	3,255,840,000.00
5	0.09975	24	478,800,000.00	7.14	3,418,632,000.00
5	0.09975	24	478,800,000.00	7.48	3,581,424,000.00
5	0.09975	24	478,800,000.00	7.82	3,744,216,000.00
5	0.09975	24	478,800,000.00	8.16	3,907,008,000.00

Appendix C – SuperPro Stream Reports

Overall Process Data		
Annual Operating Time	2922	hours
Annual Throughput	83,790,000	doses
Number of Batches per Year	3 per strain	

Stream Details — Upstream Process

Stream Name	Initial Charge	S-101	S-102	S-104	S-105
Source	Input	P-1	P-2	P-3	P-4
Destination	P-1	P-2	P-3	P-4	P-6
Activity	0.00	0.00	0.00	0.00	0.00
Temperature (°C)	28.00	28.00	28.00	28.00	28.00
Pressure (bar)	1.01	1.01	1.01	1.01	1.01
Component Flowrates (g/batch)					
Biomass	0.04	0.04	0.42	4.20	4.20
Media	3.08	3.08	7.70	61.60	308.00
Water	100.00	100.00	250.00	2000.00	10000.00
Total (g/batch)	103.12	103.12	258.12	2065.80	10312.20
Total (L/batch)	103.12	103.12	258.12	2065.80	10312.20

Stream Name	S-106	S-117	S-118	S-119	S-120
Source	P-6	P-7	P-16	P-17	P-18
Activity (U/ml)	0.00	0.00	0.00	0.00	0.00
Temperature (°C)	28.00	28.00	28.00	28.00	4.00
Pressure	1.01	1.01	1.01	1.01	1.01
Component Flowrates (g/batch)					
Biomass	4.20	42.00	0.00	4200.00	38.08
Media	308.00	3080.00	34188.00	30800.00	0.00
Water	10000.00	100000.00	1110000.00	1000000.00	100000.00
Total (g/batch)	10312.20	103122.00	1144188.00	1035000.00	100038.08
Total (L/batch)	10312.20	103122.00	1144188.00	1035000.00	100038.08

Stream Name	S-107	S-108	S-109	S-110	S-103
Source	P-8	P-9	P-10	P-11	P-12
Destination	P-9	P-10	P-11	P-12	P-4
Activity	0.00	0.00	0.00	0.00	0.00
Temperature (°C)	4.00	4.00	4.00	28.00	28.00
Pressure	1.01	1.01	1.01	1.01	1.01
Component Flowrates (g/batch)					
Biomass	0.00	0.00	0.00	0.00	0.00
Media	3080.00	3080.00	3080.00	3080.00	138.60
Water	100000.00	100000.00	100000.00	100000.00	4500.00
Total (g/batch)	103080.00	103080.00	103080.00	103080.00	4638.60
Total (L/batch)	103080.00	103080.00	103080.00	103080.00	4638.60

Stream Name	S-112	S-113	S-114	S-115	S-116
Source	P-12	P-12	P-13	P-14	P-15
Destination	P-6	P-7	P-14	P-15	P-16
Activity	0.00	0.00	0.00	0.00	0.00
Temperature (°C)	28.00	28.00	4.00	4.00	4.00
Pressure	1.01	1.01	1.01	1.01	1.01
Component Flowrates (g/batch)					
Biomass	0.00	0.00	0.00	0.00	0.00
Media	308.00	3080.00	15400.00	15400.00	34188.00
Water	10000.00	100000.00	500000.00	500000.00	1110000.00
Total (g/batch)	10308.00	103080.00	515400.00	515400.00	1144188.00
Total (L/batch)	10308.00	103080.00	515400.00	515400.00	1144188.00

Appendix C – SuperPro Stream Reports

Stream Details — Downstream Process

Stream Name	FROM USP	S-102	S-103	Det. Charge	S-104
Source	Input	P-1	P-12	Input	P-9
Destination	P-1	P-9	P-9	P-12	P-3
Activity	0.00	0.00	0.00	0.00	0.00
Temperature (°C)	28.00	28.00	28.00	28.00	28.00
Pressure (bar)	1.01	1.01	1.01	1.01	1.01
Component Flowrates (kg/batch)					
Biomass	4200.00	0.00	0.00	0.00	0.00
Water	1000000.00	990200.00	990200.00	200000.00	1100200.00
VLP	200.00	0.00	200.00	0.00	189.00
Medium	30800.00	30800.00	30800.00	0.00	30800.00
Baculovirus	0.00	0.00	0.00	0.00	0.00
TNBP	0.00	0.00	0.00	3150.00	3150.00
Triton X-100	0.00	0.00	0.00	10500.00	10500.00
Total (g/batch)	1035200.00	1021000.00	1021200.00	213650.00	1144839.00
Total (L/batch)	1035200.00	1021000.00	1021200.00	213650.00	1144839.00

Stream Name	S-105	S-106	S-107	IEX Resin	S-101
Source	P-3	P-7	P-11	Input	P-4
Destination	P-7	P-4	P-4	P-11	P-18
Activity	0.00	0.00	0.00	0.00	0.00
Temperature (°C)	28.00	28.00	28.00	28.00	28.00
Pressure (bar)	1.01	1.01	1.01	1.01	1.01
Component Flowrates (g/batch)					
Biomass	0.00	0.00	0.00	0.00	0.00
Water	200000.00	200000.00	0.00	0.00	20000.00
VLP	190.00	190.00	0.00	0.00	162.00
Medium	5600.00	5600.00	0.00	0.00	0.00
Baculovirus	0.00	0.00	0.00	0.00	0.00
TNBP	573.00	573.00	0.00	0.00	0.00
Triton X-100	1909.00	1909.00	0.00	0.00	0.00
Total (g/batch)	208272.00	0.00	0.00	0.00	0.00
Total (L/batch)	208272.00	208272.00	0.00	0.00	20162.00

Stream Name	S-108	SEC Resin	S-111	S-114	S-109
Source	P-18	Input	P-5	P-19	P-6
Destination	P-5	P-10	P-19	P-6	P-8
Activity	0.00	0.00	0.00	0.00	0.00
Temperature (°C)	28.00	28.00	28.00	28.00	28.00
Pressure (bar)	1.01	1.01	1.01	1.01	1.01
Component Flowrates (g/batch)					
Biomass	0.00	0.00	0.00	0.00	0.00
Water	20000.00	200000.00	20000.00	20000.00	10000.00
VLP	162.00	0.00	154.00	154.00	146.00
Medium	0.00	864.00	0.00	0.00	0.00
Baculovirus	0.00	5680.00	0.00	0.00	0.00
Tris-HCL	0.00	171.05	4.80	0.00	0.00
NaCl	0.00	0.00	14.00	0.00	0.00
Total (g/batch)	20162.00	0.00	20172.80	20154.00	0.00
Total (L/batch)	20162.00	206715.05	20172.80	20154.00	10146.00

Appendix C -- Gantt Chart Data

Fermentation	3.32d	each stage

Fill Times — Tank charging & draining is always 42 LPM

1L	0.024min	0days
10L	0.238min	0days
100L	2.38min	0days
1000L	23.81min	0days

	Batch 1			
Task	Start Date	Gap Time	Time (days)	End Date
Innoculate 100 mL	0		3.32	3.32
Innoculate 500 mL	3.32		3.32	6.64
Innoculate 4L Flask	6.64		3.3234725	9.9634725
Fill 20L Bioreactor	9.9634725		2.75463E-06	9.963475255
Ferment 20L Bioreactor	9.963475255		3.32	13.28347525
Fill 200L Bioreactor	13.28347525		2.75463E-05	13.2835028
Ferment 200L Bioreactor	13.2835028		3.32	16.6035028
Fill 2000L Bioreactor	16.6035028		0.000275579	16.60377838
Ferment 2000L Bioreactor	16.60377838		3.32	19.92377838
Fill Hold Tank 1	19.92377838		0.000275579	19.92405396
Centrifuge	19.92405396		0.347083333	20.27113729
Fill Inactivation Tank	20.27113729		0.000275579	20.27141287
Inactivation	20.27141287		0.020833333	20.2922462
Tangential Flow Filtration	20.2922462		0.347083333	20.63932954
Fill Hold Tank 2	20.2922462		0.347358912	20.63960512
Ion Exchange Chromatography	20.63960512		5	25.63960512
Fill Hold Tank 3	25.63960512		0.000275579	25.63988069
Size Exclusion	25.63988069		5	30.63988069
Fill Hold Tank 4	30.63988069		0.000275579	30.64015627
Tangential Flow Filtration	30.64015627		0.347083333	30.98723961
Fill Hold Tank 5	30.64015627		0.347358912	30.98751519
Packaging into Vial	30.98751519		5.92593	36.91344519

Batch 2			
Start Date	Gap Time 1	Time (days)	End Date
0	0	3.32	3.32
0	0	3.32	3.32
0	0	3.3234725	3.3234725
9.963475255	3.281803079	0.041669421	10.00514468
13.28347525	0.041669421	3.32	16.60347525
13.2835028	3.32	0.041694213	13.32519701
16.6035028	0.041694213	3.32	19.9235028
16.60377838	3.32	0.041942245	16.64572063
19.92377838	0.041942245	3.32	23.24377838
19.92405396	3.32	1.630782063	21.55483602
20.27113729	4.603423151	0.347083333	20.61822063
3.667358912	4.950506484	0.000275579	3.667634491
20.2922462	4.975783243	0.020833333	20.31307954
19.94461173	4.632594937	0.347083333	20.29169506
20.63960512	4.632319358	0.347358912	20.98696403
25.63960512	0.000275579	5	30.63960512
25.63988069	5	0.000275579	25.64015627
30.63988069	0.000275579	5	35.63988069
30.64015627	5	0.000275579	30.64043185
30.98723961	4.652916667	0.347083333	31.33432294
30.98751519	4.652090021	1.273839979	32.26135516
36.91344519	0	5.92593	42.83937519

Batch 3			
Start Date	Gap Time 2	Time (days)	End Date
0	0	3.32	3.32
0	0	3.32	3.32
0	0	3.3234725	3.3234725
10.00514468	3.281803079	0.041669421	10.0468141
16.60347525	0.041669421	3.32	19.92347525
13.32519701	3.32	0.041694213	13.36689123
19.9235028	0.041694213	3.32	23.2435028
16.64572063	3.32	0.041942245	16.68766287
23.24377838	0.041942245	3.32	26.56377838
21.55483602	1.689217937	3.013743403	24.56857942
4.704076849	4.356153585	0.347083333	5.051160183
3.667634491	4.702031255	0.000275579	3.667910069
20.31307954	4.66924063	0.020833333	20.33391287
19.59697725	4.50924063	0.347083333	19.94406058
20.98696403	4.50924063	0.347358912	21.33432294
30.63960512	0.000275579	5	35.63960512
25.64015627	5	0.000275579	25.64043185
35.63988069	0.000275579	5	40.63988069
30.64043185	5	0.000275579	30.64070743
31.33432294	4.652916667	0.347083333	31.68140627
32.26135516	3.671233238	2.254696762	34.51605193
42.83937519	0	5.92593	48.76530519

Batch 4			
Start Date	Gap Time 3	Time (days)	End Date
0	0	3.32	3.32
0	0	3.32	3.32
0	0	3.3234725	3.3234725
10.0468141	3.281803079	0.041669421	10.08848352
19.92347525	0.041669421	3.32	23.24347525
13.36689123	3.32	0.041694213	13.40858544
23.2435028	0.041694213	3.32	26.5635028
16.68766287	3.32	0.041942245	16.72960512
26.56377838	0.041942245	3.32	29.88377838
24.56857942	0.5452	4.755043545	29.32362297
5.051160183	4.967960212	0.347083333	5.398243516
3.667910069	5.309416241	0.000275579	3.668185648
20.33391287	5.250399148	0.020833333	20.3547462
19.24934277	4.70924063	0.347083333	19.5964261
21.33432294	4.70924063	0.347358912	21.68168185
35.63960512	0.000275579	5	40.63960512
25.64043185	5	0.000275579	25.64070743
40.63988069	0.000275579	5	45.63988069
30.64070743	5	0.000275579	30.64098301
31.68140627	4.652916667	0.347083333	32.02848961
34.51605193	2.741330053	3.184599947	37.70065187
48.76530519	0	5.92593	54.69123519

Batch 5			
Start Date	Gap Time 4	Time (days)	End Date
0	0	3.32	3.32
0	0	3.32	3.32
0	0	3.3234725	3.3234725
10.08848352	3.281803079	0.041669421	10.13015294
23.24347525	0.041669421	3.32	26.56347525
13.40858544	3.32	0.041694213	13.45027965
26.5635028	0.041694213	3.32	29.8835028
16.72960512	3.32	0.041942245	16.77154736
29.88377838	0.041942245	3.32	33.20377838
29.32362297	0.3652	4.555043545	33.87866651
5.398243516	4.592055729	0.347083333	5.745326849
3.668185648	4.969469349	0.000275579	3.668461227
20.3547462	5.033726493	0.020833333	20.37557954
18.90170829	4.688407297	0.347083333	19.24879162
21.68168185	4.688407297	0.347358912	22.02904076
40.63960512	0.000275579	5	45.63960512
25.64070743	5	0.000275579	25.64098301
45.63988069	0.000275579	5	50.63988069
30.64098301	5	0.000275579	30.64125859
32.02848961	4.652916667	0.347083333	32.37557294
37.70065187	1.849642068	4.076287932	41.7769398
54.69123519	0	5.92593	60.61716519

Batch 6			
Start Date	Gap Time 5	Time (days)	End Date
0	0	3.32	3.32
0	0	3.32	3.32
0	0	3.3234725	3.3234725
10.13015294	3.281803079	0.041669421	10.17182236
26.56347525	0.041669421	3.32	29.88347525
13.45027965	3.32	0.041694213	13.49197387
29.8835028	0.041694213	3.32	33.2035028
16.77154736	3.32	0.041942245	16.81348961
33.20377838	0.041942245	3.32	36.52377838
33.87866651	0.3652	4.755043545	38.63371006
5.745326849	4.714055729	0.347083333	6.092410183
3.668461227	4.934629029	0.000275579	3.668736806
20.37557954	4.924669688	0.020833333	20.39641287
18.55407381	4.688407297	0.347083333	18.90115714
22.02904076	4.688407297	0.347358912	22.37639968
45.63960512	0.000275579	5	50.63960512
25.64098301	5	0.000275579	25.64125859
50.63988069	0	5	55.63988069
30.64125859	5	0.000275579	30.64153417
32.37557294	4.652916667	0.347083333	32.72265627
41.7769398	0.957954083	4.967975917	46.74491572
60.61716519	0	5.92593	66.54309519

Material Safety Data Sheet

Version 3.4
Revision Date 04/26/2012
Print Date 03/31/2013

1. PRODUCT AND COMPANY IDENTIFICATION

Product name	:	D-(+)-Glucose
Product Number	:	G7528
Brand	:	Sigma
Supplier	:	Sigma-Aldrich 3050 Spruce Street SAINT LOUIS MO 63103 USA
Telephone	:	+1 800-325-5832
Fax	:	+1 800-325-5052
Emergency Phone # (For both supplier and manufacturer)	:	(314) 776-6555
Preparation Information	:	Sigma-Aldrich Corporation Product Safety - Americas Region 1-800-521-8956

2. HAZARDS IDENTIFICATION

Emergency Overview

OSHA Hazards
No known OSHA hazards

Not a dangerous substance according to GHS.

HMIS Classification

Health hazard: 0
Flammability: 0
Physical hazards: 0

NFPA Rating

Health hazard: 0
Fire: 0
Reactivity Hazard: 0

Potential Health Effects

Inhalation	May be harmful if inhaled. May cause respiratory tract irritation.
Skin	May be harmful if absorbed through skin. May cause skin irritation.
Eyes	May cause eye irritation.
Ingestion	May be harmful if swallowed.

3. COMPOSITION/INFORMATION ON INGREDIENTS

Synonyms	:	Dextrose
Formula	:	$C_6H_{12}O_6$
Molecular Weight	:	180.16 g/mol

No ingredients are hazardous according to OSHA criteria.

4. FIRST AID MEASURES

If inhaled
If breathed in, move person into fresh air. If not breathing, give artificial respiration.

In case of skin contact
Wash off with soap and plenty of water.

In case of eye contact
Flush eyes with water as a precaution.

If swallowed
Never give anything by mouth to an unconscious person. Rinse mouth with water.

5. FIREFIGHTING MEASURES

Suitable extinguishing media
Use water spray, alcohol-resistant foam, dry chemical or carbon dioxide.

Special protective equipment for firefighters
Wear self contained breathing apparatus for fire fighting if necessary.

Hazardous combustion products
Hazardous decomposition products formed under fire conditions. - Carbon oxides

6. ACCIDENTAL RELEASE MEASURES

Personal precautions
Avoid dust formation. Avoid breathing vapors, mist or gas.

Environmental precautions
Do not let product enter drains.

Methods and materials for containment and cleaning up
Sweep up and shovel. Keep in suitable, closed containers for disposal.

7. HANDLING AND STORAGE

Precautions for safe handling
Provide appropriate exhaust ventilation at places where dust is formed. Normal measures for preventive fire protection.

Conditions for safe storage
Keep container tightly closed in a dry and well-ventilated place.

Keep in a dry place.

8. EXPOSURE CONTROLS/PERSONAL PROTECTION

Contains no substances with occupational exposure limit values.

Personal protective equipment

Respiratory protection
Respiratory protection is not required. Where protection from nuisance levels of dusts are desired, use type N95 (US) or type P1 (EN 143) dust masks. Use respirators and components tested and approved under appropriate government standards such as NIOSH (US) or CEN (EU).

Hand protection
Handle with gloves. Gloves must be inspected prior to use. Use proper glove removal technique (without touching glove's outer surface) to avoid skin contact with this product. Dispose of contaminated gloves after use in accordance with applicable laws and good laboratory practices. Wash and dry hands.

Immersion protection
Material: Nitrile rubber
Minimum layer thickness: 0.11 mm
Break through time: > 480 min
Material tested:Dermatril® (Aldrich Z677272, Size M)

Splash protection
Material: Nitrile rubber
Minimum layer thickness: 0.11 mm

Break through time: > 30 min
Material tested:Dermatril® (Aldrich Z677272, Size M)

data source: KCL GmbH, D-36124 Eichenzell, phone +49 (0)6659 873000, e-mail sales@kcl.de, test method: EN374
If used in solution, or mixed with other substances, and under conditions which differ from EN 374, contact the supplier of the CE approved gloves. This recommendation is advisory only and must be evaluated by an Industrial Hygienist familiar with the specific situation of anticipated use by our customers. It should not be construed as offering an approval for any specific use scenario.

Eye protection
Use equipment for eye protection tested and approved under appropriate government standards such as NIOSH (US) or EN 166(EU).

Skin and body protection
Choose body protection in relation to its type, to the concentration and amount of dangerous substances, and to the specific work-place., The type of protective equipment must be selected according to the concentration and amount of the dangerous substance at the specific workplace.

Hygiene measures
General industrial hygiene practice.

9. PHYSICAL AND CHEMICAL PROPERTIES

Appearance

Form	crystalline, powder
Colour	white

Safety data

pH	no data available
Melting point/freezing point	Melting point/range: 150 - 152 °C (302 - 306 °F)
Boiling point	no data available
Flash point	no data available
Ignition temperature	no data available
Autoignition temperature	no data available
Lower explosion limit	no data available
Upper explosion limit	no data available
Vapour pressure	no data available
Density	no data available
Water solubility	soluble
Partition coefficient: n-octanol/water	no data available
Relative vapour density	no data available
Odour	no data available
Odour Threshold	no data available
Evaporation rate	no data available

10. STABILITY AND REACTIVITY

Chemical stability
Stable under recommended storage conditions.

Possibility of hazardous reactions
no data available

Conditions to avoid
no data available

Materials to avoid
Strong oxidizing agents

Hazardous decomposition products
Hazardous decomposition products formed under fire conditions. - Carbon oxides
Other decomposition products - no data available

11. TOXICOLOGICAL INFORMATION

Acute toxicity

Oral LD50
LD50 Oral - rat - 25,800 mg/kg
Remarks: Behavioral:Coma. Cyanosis Diarrhoea

Inhalation LC50
no data available

Dermal LD50
no data available

Other information on acute toxicity
no data available

Skin corrosion/irritation
no data available

Serious eye damage/eye irritation
no data available

Respiratory or skin sensitization
no data available

Germ cell mutagenicity

Genotoxicity in vitro - mouse - lymphocyte
Mutation in mammalian somatic cells.

Carcinogenicity

IARC:	No component of this product present at levels greater than or equal to 0.1% is identified as probable, possible or confirmed human carcinogen by IARC.
ACGIH:	No component of this product present at levels greater than or equal to 0.1% is identified as a carcinogen or potential carcinogen by ACGIH.
NTP:	No component of this product present at levels greater than or equal to 0.1% is identified as a known or anticipated carcinogen by NTP.
OSHA:	No component of this product present at levels greater than or equal to 0.1% is identified as a carcinogen or potential carcinogen by OSHA.

Reproductive toxicity

no data available

Teratogenicity

no data available

Specific target organ toxicity - single exposure (Globally Harmonized System)
no data available

Specific target organ toxicity - repeated exposure (Globally Harmonized System)

no data available

Aspiration hazard
no data available

Potential health effects

Inhalation	May be harmful if inhaled. May cause respiratory tract irritation.
Ingestion	May be harmful if swallowed.
Skin	May be harmful if absorbed through skin. May cause skin irritation.
Eyes	May cause eye irritation.

Signs and Symptoms of Exposure
To the best of our knowledge, the chemical, physical, and toxicological properties have not been thoroughly investigated.

Synergistic effects
no data available

Additional Information
RTECS: LZ6600000

12. ECOLOGICAL INFORMATION

Toxicity

no data available

Persistence and degradability
no data available

Bioaccumulative potential
no data available

Mobility in soil
no data available

PBT and vPvB assessment
no data available

Other adverse effects

no data available

13. DISPOSAL CONSIDERATIONS

Product
Offer surplus and non-recyclable solutions to a licensed disposal company.

Contaminated packaging
Dispose of as unused product.

14. TRANSPORT INFORMATION

DOT (US)
Not dangerous goods

IMDG
Not dangerous goods

IATA
Not dangerous goods

15. REGULATORY INFORMATION

OSHA Hazards
No known OSHA hazards

SARA 302 Components
SARA 302: No chemicals in this material are subject to the reporting requirements of SARA Title III, Section 302.

SARA 313 Components
SARA 313: This material does not contain any chemical components with known CAS numbers that exceed the threshold (De Minimis) reporting levels established by SARA Title III, Section 313.

SARA 311/312 Hazards
No SARA Hazards

Massachusetts Right To Know Components
No components are subject to the Massachusetts Right to Know Act.

Pennsylvania Right To Know Components

	CAS-No.	Revision Date
Glucose	50-99-7	

New Jersey Right To Know Components

	CAS-No.	Revision Date
Glucose	50-99-7	

California Prop. 65 Components
This product does not contain any chemicals known to State of California to cause cancer, birth defects, or any other reproductive harm.

16. OTHER INFORMATION

Further information
Copyright 2012 Sigma-Aldrich Co. LLC. License granted to make unlimited paper copies for internal use only.
The above information is believed to be correct but does not purport to be all inclusive and shall be used only as a guide. The information in this document is based on the present state of our knowledge and is applicable to the product with regard to appropriate safety precautions. It does not represent any guarantee of the properties of the product. Sigma-Aldrich Corporation and its Affiliates shall not be held liable for any damage resulting from handling or from contact with the above product. See www.sigma-aldrich.com and/or the reverse side of invoice or packing slip for additional terms and conditions of sale.

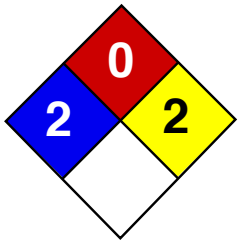

Health	2
Fire	0
Reactivity	1
Personal Protection	C

Material Safety Data Sheet
Calcium chloride, Anhydrous MSDS

Section 1: Chemical Product and Company Identification

Product Name: Calcium chloride, Anhydrous

Catalog Codes: SLC5011, SLC2221, SLC4012, SLC4798, SLC1006

CAS#: 10043-52-4

RTECS: EV9800000

TSCA: TSCA 8(b) inventory: Calcium chloride, Anhydrous

CI#: Not available.

Synonym:

Chemical Name: Calcium Chloride, Anhydrous

Chemical Formula: CaCl2

Contact Information:

Sciencelab.com, Inc.
14025 Smith Rd.
Houston, Texas 77396

US Sales: **1-800-901-7247**
International Sales: **1-281-441-4400**

Order Online: ScienceLab.com

CHEMTREC (24HR Emergency Telephone), call: 1-800-424-9300

International CHEMTREC, call: 1-703-527-3887

For non-emergency assistance, call: 1-281-441-4400

Section 2: Composition and Information on Ingredients

Composition:

Name	CAS #	% by Weight
Calcium chloride, Anhydrous	10043-52-4	100

Toxicological Data on Ingredients: Calcium chloride, Anhydrous: ORAL (LD50): Acute: 1000 mg/kg [Rat]. 1940 mg/kg [Mouse].

Section 3: Hazards Identification

Potential Acute Health Effects:
Hazardous in case of skin contact (irritant), of eye contact (irritant), of ingestion, of inhalation. Slightly hazardous in case of skin contact (permeator).

Potential Chronic Health Effects:
CARCINOGENIC EFFECTS: Not available. MUTAGENIC EFFECTS: Mutagenic for mammalian somatic cells. Mutagenic for bacteria and/or yeast. TERATOGENIC EFFECTS: Not available. DEVELOPMENTAL TOXICITY: Not available. The substance may be toxic to heart, cardiovascular system. Repeated or prolonged exposure to the substance can produce target organs damage.

Section 4: First Aid Measures

Eye Contact:
Check for and remove any contact lenses. In case of contact, immediately flush eyes with plenty of water for at least 15 minutes. Cold water may be used. Get medical attention.

Skin Contact:
In case of contact, immediately flush skin with plenty of water. Cover the irritated skin with an emollient. Remove contaminated clothing and shoes. Cold water may be used.Wash clothing before reuse. Thoroughly clean shoes before reuse. Get medical attention.

Serious Skin Contact:
Wash with a disinfectant soap and cover the contaminated skin with an anti-bacterial cream. Seek immediate medical attention.

Inhalation:
If inhaled, remove to fresh air. If not breathing, give artificial respiration. If breathing is difficult, give oxygen. Get medical attention.

Serious Inhalation: Not available.

Ingestion:
Do NOT induce vomiting unless directed to do so by medical personnel. Never give anything by mouth to an unconscious person. If large quantities of this material are swallowed, call a physician immediately. Loosen tight clothing such as a collar, tie, belt or waistband.

Serious Ingestion: Not available.

Section 5: Fire and Explosion Data

Flammability of the Product: Non-flammable.

Auto-Ignition Temperature: Not applicable.

Flash Points: Not applicable.

Flammable Limits: Not applicable.

Products of Combustion: Not available.

Fire Hazards in Presence of Various Substances: Not applicable.

Explosion Hazards in Presence of Various Substances:
Risks of explosion of the product in presence of mechanical impact: Not available. Risks of explosion of the product in presence of static discharge: Not available.

Fire Fighting Media and Instructions: Not applicable.

Special Remarks on Fire Hazards: Not available.

Special Remarks on Explosion Hazards: Furan-2-peroxycarboxylic acid + calcium chloride causes explosion at room temperature.

Section 6: Accidental Release Measures

Small Spill:
Use appropriate tools to put the spilled solid in a convenient waste disposal container. Finish cleaning by spreading water on the contaminated surface and dispose of according to local and regional authority requirements.

Large Spill:
Use a shovel to put the material into a convenient waste disposal container. Finish cleaning by spreading water on the contaminated surface and allow to evacuate through the sanitary system.

Section 7: Handling and Storage

Precautions:
Keep locked up.. Do not ingest. Do not breathe dust. Wear suitable protective clothing. In case of insufficient ventilation, wear suitable respiratory equipment. If ingested, seek medical advice immediately and show the container or the label. Avoid contact with skin and eyes. Keep away from incompatibles such as moisture.

Storage:
Hygroscopic. Keep container tightly closed. Keep container in a cool, well-ventilated area. Do not store above 30°C (86°F).

Section 8: Exposure Controls/Personal Protection

Engineering Controls:
Use process enclosures, local exhaust ventilation, or other engineering controls to keep airborne levels below recommended exposure limits. If user operations generate dust, fume or mist, use ventilation to keep exposure to airborne contaminants below the exposure limit.

Personal Protection: Safety glasses. Synthetic apron. Gloves (impervious).

Personal Protection in Case of a Large Spill:
Splash goggles. Full suit. Boots. Gloves. Suggested protective clothing might not be sufficient; consult a specialist BEFORE handling this product.

Exposure Limits: Not available.

Section 9: Physical and Chemical Properties

Physical state and appearance: Solid. (Crystalline solid.)

Odor: Odorless.

Taste: Saline.

Molecular Weight: 110.99 g/mole

Color: Colorless. White. Off-white.

pH (1% soln/water): 9 [Basic.]

Boiling Point: 1670°C (3038°F)

Melting Point: 772°C (1421.6°F)

Critical Temperature: Not available.

Specific Gravity: 2.15 (Water = 1)

Vapor Pressure: Not applicable.

Vapor Density: Not available.

Volatility: Not available.

Odor Threshold: Not available.

Water/Oil Dist. Coeff.: Not available.

Ionicity (in Water): Not available.

Dispersion Properties: See solubility in water, acetone.

Solubility:
Easily soluble in cold water, hot water, acetone. Freely soluble in alcohol. Soluble in Acetic Acid.

Section 10: Stability and Reactivity Data

Stability: The product is stable.

Instability Temperature: Not available.

Conditions of Instability: Incompatible materials, moisture.

Incompatibility with various substances: Reactive with moisture.

Corrosivity: Non-corrosive in presence of glass.

Special Remarks on Reactivity:
Hygroscopic. Reacts violently (violent boiling) with water, generating heat. Forms flammable gases and evolves hydrogen when reacted with zinc. Solutions attack some metals. Generates heat and violent polymerization occurs when mixed with methyl vinyl ether. Bromine trifluoride reacts violently with and attacks calcium chloride.

Special Remarks on Corrosivity: Not available.

Polymerization: Will not occur.

Section 11: Toxicological Information

Routes of Entry: Absorbed through skin. Inhalation. Ingestion.

Toxicity to Animals: Acute oral toxicity (LD50): 1000 mg/kg [Rat].

Chronic Effects on Humans:
MUTAGENIC EFFECTS: Mutagenic for mammalian somatic cells. Mutagenic for bacteria and/or yeast. May cause damage to the following organs: heart, cardiovascular system.

Other Toxic Effects on Humans:
Hazardous in case of skin contact (irritant), of ingestion, of inhalation. Slightly hazardous in case of skin contact (permeator).

Special Remarks on Toxicity to Animals:
Lowest Published Lethal Dose: LDL [Rabbit] - Route: Oral; Dose: 1384 mg/kg

Special Remarks on Chronic Effects on Humans:
May affect genetic material based on animal data. May cause cancer (tumorigenic) based on animal data.

Special Remarks on other Toxic Effects on Humans:
Acute Potential Health Effects: Skin: May cause severe irritation and possible burns, especially if skin is wet. Contact with dry skin causes mild irritation. Contact of solid with moist/wet skin or skin contact with strong solutions may cause marked irritation or possible burns. Eyes: May cause severe irritation, possible transient corneal injury, and possible eye burns. Inhalation: May cause severe irritation of the upper respiratory tract with pain, inflammation and possible burns. Ingestion: May cause severe gastrointestinal (digestive) tract irritation with nausea, vomiting and possible burns. May affect cardiovascular system (cardiac disturbances, slow heart beat), behavior (seizures), metabolism, blood, and brain, respiration (rapid respiration). Chronic Potential Health Effects: effects may be delayed.

Section 12: Ecological Information

Ecotoxicity: Ecotoxicity in water (LC50): 100 mg/l 96 hours [Fish].

BOD5 and COD: Not available.

Products of Biodegradation:
Possibly hazardous short term degradation products are not likely. However, long term degradation products may arise.

Toxicity of the Products of Biodegradation: The products of degradation are less toxic than the product itself.

Special Remarks on the Products of Biodegradation: Not available.

Section 13: Disposal Considerations

Waste Disposal:
Waste must be disposed of in accordance with federal, state and local environmental control regulations.

Section 14: Transport Information

DOT Classification: Not a DOT controlled material (United States).

Identification: Not applicable.

Special Provisions for Transport: Not applicable.

Section 15: Other Regulatory Information

Federal and State Regulations: TSCA 8(b) inventory: Calcium chloride, Anhydrous

Other Regulations: EINECS: This product is on the European Inventory of Existing Commercial Chemical Substances.

Other Classifications:

WHMIS (Canada): CLASS D-2B: Material causing other toxic effects (TOXIC).

DSCL (EEC):
R36- Irritating to eyes. S2- Keep out of the reach of children. S22- Do not breathe dust. S24- Avoid contact with skin.

HMIS (U.S.A.):

Health Hazard: 2

Fire Hazard: 0

Reactivity: 1

Personal Protection: C

National Fire Protection Association (U.S.A.):

Health: 2

Flammability: 0

Reactivity: 2

Specific hazard:

Protective Equipment:
Gloves (impervious). Synthetic apron. Wear appropriate respirator when ventilation is inadequate. Safety glasses.

Section 16: Other Information

References: Not available.

Other Special Considerations: Not available.

Created: 10/09/2005 04:31 PM

Last Updated: 06/09/2012 12:00 PM

The information above is believed to be accurate and represents the best information currently available to us. However, we make no warranty of merchantability or any other warranty, express or implied, with respect to such information, and we assume no liability resulting from its use. Users should make their own investigations to determine the suitability of the information for their particular purposes. In no event shall ScienceLab.com be liable for any claims, losses, or damages of any third party or for lost profits or any special, indirect, incidental, consequential or exemplary damages, howsoever arising, even if ScienceLab.com has been advised of the possibility of such damages.

Material Safety Data Sheet
acc. to ISO/DIS 11014

Date Prepared: 11/01/2011 Reviewed On: 07/15/2011

1 Identification of the substance/mixture and of the company/undertaking

· **Product Identifier**
· **Product Name:** **Bacto TC Yeastolate**
· **Catalog Number:** 255771

· **Details of the supplier of the safety data sheet**
· **Manufacturer/Supplier:**
BD Diagnostic Systems
7 Loveton Circle
Sparks, MD 21152
Telephone: (410) 771 - 0100 or (800) 638 – 8663
· **Information Department:** Technical Service
· **Emergency telephone number:**
In case of a chemical emergency, spill, fire, exposure, or accident, contact BD Diagnostic Systems (410) 771-0100 or (800)-638-8663, or ChemTrec at (800) 424-9300.

2 Composition/information on ingredients

· **Chemical characterization: Substances**
· **CAS No. Description:**
.

3 Hazards identification

· **Classification of the substance or mixture**
The substance is not classified according to the Globally Harmonized System (GHS).

· **Classification according to Directive 67/548/EEC or Directive 1999/45/EC**
This product contains no hazardous constituents, or the concentration of all chemical constituents are below the regulatory threshold limits described by Occupational Safety Health Administration Hazard Communication Standard 29 CFR 1910.1200, the Canada's Workplace Hazardous Materials Information System (WHMIS) and the European Directive 67/548/EEC and 1999/45/EC.

Void

· **Label elements**

· **Labelling according to EU guidelines:**
Observe the general safety regulations when handling chemicals
The substance is not subject to classification according to the sources of literature known to us.
The product is not subject to identification regulations pertaining to regulations on hazardous materials.
· **NFPA ratings (scale 0-4)**

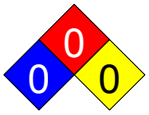

Health = 0
Flammability = 0
Reactivity = 0

(Contd. on page 2)

Material Safety Data Sheet
acc. to ISO/DIS 11014

Date Prepared: 11/01/2011 Reviewed On: 07/15/2011

Product Name: Bacto TC Yeastolate

(Contd. of page 1)

· **HMIS ratings (scale 0-4)**

HEALTH	0	Health = 0
FIRE	0	Flammability = 0
REACTIVITY	0	Reactivity = 0

· **Other hazards**

4 First aid measures

· **General information** No special measures required.
· **After inhalation** Seek medical treatment in case of complaints.
· **After skin contact** Immediately wash with water and soap and rinse thoroughly.
· **After eye contact**
Rinse opened eye for several minutes under running water. If symptoms persist, consult a doctor.
· **After swallowing** If symptoms persist consult doctor.
· **Information for doctor** Show this product label or this MSDS.

5 Firefighting measures

· **Suitable extinguishing agents**
CO_2, ABC multipurpose dry chemical or water spray. Fight larger fires with water spray or alcohol resistant foam.
· **Special hazards arising from the substance or mixture**
No further relevant information available.
· **Protective equipment:** No special measures required.

6 Accidental release measures

· **Personal precautions, protective equipment and emergency procedures** Not required.
· **Environmental precautions:** Wipe up with damp sponge or mop.
· **Methods and material for containment and cleaning up:** No special measures required.
· **Reference to other sections** No dangerous substances are released.

7 Handling and storage

· **Handling**
· **Precautions for safe handling** No special measures required.
· **Information about protection against explosions and fires:**
No special measures required.
· **Storage**
· **Requirements to be met by storerooms and receptacles:** < 30 °C
· **Information about storage in one common storage facility:**
Store away from oxidizing agents.

(Contd. on page 3)

Material Safety Data Sheet
acc. to ISO/DIS 11014

Date Prepared: 11/01/2011 Reviewed On: 07/15/2011

Product Name: Bacto TC Yeastolate

(Contd. of page 2)

· **Further information about storage conditions:**
Store in cool, dry conditions in well sealed containers.
· **Specific end use(s)** No further relevant information available.

8 Exposure controls/personal protection

· **Additional information about design of technical systems:**
No further data; see Section 7.
· **Components with limit values that require monitoring at the workplace:** Not required.
· **Additional information:** The lists that were valid during the creation were used as basis.
· **Personal Protective Equipment**
· **General protective and hygienic measures**
The usual precautionary measures for handling chemicals should be followed.
· **Breathing equipment:**
In case of brief exposure, use a chemical fume hood or a NIOSH/MSHA-approved respirator.
· **Protection of hands:**

Chemical resistant gloves (i.e. nitrile, or equivalent).

· **Eye protection:** Safety glasses
· **Body protection:** Protective work clothing (lab coat).

9 Physical and chemical properties

· **General Information**	
· **Appearance:**	
Form:	Solid.
Color:	According to product specification
· **Odor:**	Characteristic
· **Change in condition**	Undetermined
· **Melting point/Melting range:**	Not determined
· **Boiling point/Boiling range:**	Not determined
· **Flash point:**	Not applicable
· **Flammability (solid, gaseous)**	Product is not flammable.
· **Danger of explosion:**	Product does not present an explosion hazard.
· **Density:**	Not determined
· **Solubility in / Miscibility with Water:**	Soluble
Solids content:	100.0 %

(Contd. on page 4)

Material Safety Data Sheet
acc. to ISO/DIS 11014

Date Prepared: 11/01/2011 Reviewed On: 07/15/2011

Product Name: Bacto TC Yeastolate

(Contd. of page 3)

· **Other information** No further relevant information available.

10 Stability and reactivity

· **Thermal decomposition / conditions to be avoided:**
No decomposition if used according to specifications.
· **Incompatible materials:** No further relevant information available.
· **Hazardous decomposition products:** No dangerous decomposition products known.

11 Toxicological information

· **Acute toxicity:**
· **Primary irritant effect:**
· **on the skin:** No irritating effect.
· **on the eye:** No irritating effect.
· **Sensitization:** No sensitizing effects known.
· **Additional toxicological information:**
The product is not subject to OSHA classification according to internally approved calculation methods for preparations.
When used and handled according to specifications, the product does not have any harmful effects according to our experience and the information provided to us.
The substance is not subject to classification.

12 Ecological information

· **Aquatic toxicity:** No further relevant information available.
· **Persistence and degradability** No further relevant information available.
· **Behavior in environmental systems:**
· **Bioaccumulative potential** No further relevant information available.
· **Ecotoxical effects:**
· **Other information:**
The ecological effects have not been thoroughly investigated, but currently none have been identified.
· **Additional ecological information:**
· **General notes:** Generally not hazardous for water.

13 Disposal considerations

· **Waste treatment methods**
· **Recommendation**
Smaller quantities can be disposed of with solid waste.
Dispose of material in accordance with federal (40 CFR 261.3), state and local requirements.

(Contd. on page 5)

Material Safety Data Sheet
acc. to ISO/DIS 11014

Date Prepared: 11/01/2011 Reviewed On: 07/15/2011

Product Name: Bacto TC Yeastolate

(Contd. of page 4)

This product is not considered a RCRA hazardous waste.

· **Uncleaned packagings:**
· **Recommendation:** Disposal must be made according to state and federal regulations.
· **Recommended cleansing agent:** Water, if necessary with cleansing agents.

14 Transport information

· **UN-Number**	
· **DOT, ADR, ADN, IMDG, IATA**	Void
· **UN proper shipping name**	
· **DOT, ADR, ADN, IMDG, IATA**	Void
· **Transport hazard class(es)**	
· **DOT, ADR, ADN, IMDG, IATA**	
· **Class**	Void
· **Packing group**	
· **DOT, ADR, IMDG, IATA**	Void
· **Environmental hazards:**	
· **Marine pollutant:**	No
· **Special precautions for user**	Not applicable.
· **Transport in bulk according to Annex II of MARPOL73/78 and the IBC Code**	Not applicable.
· **Transport/Additional information:**	If a "void" appears in the Hazard Class section for the type of transportation, this indicates the product is not regulated for transportation.
· **UN "Model Regulation":**	-

15 Regulatory information

· **SARA Section 355 (extremely hazardous substances)**

Substance is not listed.

· **SARA Section 313 (specific toxic chemical listings)**

Substance is not listed.

· **TSCA (Toxic Substances Control Act)**

Substance is not listed.

(Contd. on page 6)

Material Safety Data Sheet
acc. to ISO/DIS 11014

Date Prepared: 11/01/2011 Reviewed On: 07/15/2011

Product Name: Bacto TC Yeastolate

(Contd. of page 5)

· **California Proposition 65 - Chemicals known to cause cancer**

Substance is not listed.

· **California Proposition 65 - Chemicals known to cause reproductive toxicity for females:**

Substance is not listed.

· **California Proposition 65 - Chemicals known to cause reproductive toxicity for males:**

Substance is not listed.

· **California Proposition 65 - Chemicals known to cause developmental toxicity:**

Substance is not listed.

· **Carcinogenic categories**

· **NTP (National Toxicology Program)**

Substance is not listed.

· **TLV (Threshold Limit Value established by ACGIH)**

Substance is not listed.

· **Product related hazard information:**
Observe the general safety regulations when handling chemicals
The substance is not subject to classification according to the sources of literature known to us.
The product is not subject to identification regulations pertaining to regulations on hazardous materials.

· **National regulations**

· **Water hazard class:** Generally not hazardous for water.

16 Other information

To the best of our knowledge, the information contained herein is accurate. However, neither Becton, Dickinson and Company or any of its subsidiaries assumes any liabilities whatsoever for the accuracy or completeness of the information contained herein. Final determination of suitability of any material is the sole responsibility of the user. All materials may present unknown hazards and should be used with caution. Although certain hazards are described herein, we can not guarantee that these are the only hazards that exist.

· **Department issuing MSDS:**
Environmental, Health & Safety
Created by Michael J. Spinazzola

· **Contact:** Technical Service Representative

· **Abbreviations and acronyms:**
ADR: Accord européen sur le transport des marchandises dangereuses par Route (European Agreement concerning the International Carriage of Dangerous Goods by Road)
RID: Règlement international concernant le transport des marchandises dangereuses par chemin de fer (Regulations Concerning the International Transport of Dangerous Goods by Rail)
IMDG: International Maritime Code for Dangerous Goods
IATA: International Air Transport Association
ICAO: International Civil Aviation Organization

(Contd. on page 7)

Material Safety Data Sheet
acc. to ISO/DIS 11014

Date Prepared: 11/01/2011 Reviewed On: 07/15/2011

Product Name: Bacto TC Yeastolate

(Contd. of page 6)

ACGIH: American Conference of Governmental Industrial Hygienists
CAS: Chemical Abstracts Service (division of the American Chemical Society)
NFPA: National Fire Protection Association (USA)
HMIS: Hazardous Materials Identification System (USA)

Material Safety Data Sheet

Version 5.2
Revision Date 11/05/2012
Print Date 03/31/2013

1. PRODUCT AND COMPANY IDENTIFICATION

Product name	:	Sodium pyruvate
Product Number	:	80443
Brand	:	Sigma-Aldrich
Supplier	:	Sigma-Aldrich 3050 Spruce Street SAINT LOUIS MO 63103 USA
Telephone	:	+1 800-325-5832
Fax	:	+1 800-325-5052
Emergency Phone # (For both supplier and manufacturer)	:	(314) 776-6555
Preparation Information	:	Sigma-Aldrich Corporation Product Safety - Americas Region 1-800-521-8956

2. HAZARDS IDENTIFICATION

Emergency Overview

OSHA Hazards
No known OSHA hazards

Not a dangerous substance or mixture according to the Globally Harmonised System (GHS).

HMIS Classification

Health hazard: 0
Flammability: 0
Physical hazards: 0

NFPA Rating

Health hazard: 0
Fire: 0
Reactivity Hazard: 0

Potential Health Effects

Inhalation	May be harmful if inhaled. May cause respiratory tract irritation.
Skin	May be harmful if absorbed through skin. May cause skin irritation.
Eyes	May cause eye irritation.
Ingestion	May be harmful if swallowed.

3. COMPOSITION/INFORMATION ON INGREDIENTS

Formula	:	$C_3H_3NaO_3$
Molecular Weight	:	110.04 g/mol

No ingredients are hazardous according to OSHA criteria.

4. FIRST AID MEASURES

If inhaled
If breathed in, move person into fresh air. If not breathing, give artificial respiration.

In case of skin contact
Wash off with soap and plenty of water.

In case of eye contact
Flush eyes with water as a precaution.

If swallowed
Never give anything by mouth to an unconscious person. Rinse mouth with water.

5. FIREFIGHTING MEASURES

Conditions of flammability
Not flammable or combustible.

Suitable extinguishing media
Use water spray, alcohol-resistant foam, dry chemical or carbon dioxide.

Special protective equipment for firefighters
Wear self contained breathing apparatus for fire fighting if necessary.

Hazardous combustion products
Hazardous decomposition products formed under fire conditions. - Carbon oxides, Sodium oxides

6. ACCIDENTAL RELEASE MEASURES

Personal precautions
Avoid dust formation. Avoid breathing vapors, mist or gas.

Environmental precautions
Do not let product enter drains.

Methods and materials for containment and cleaning up
Sweep up and shovel. Keep in suitable, closed containers for disposal.

7. HANDLING AND STORAGE

Precautions for safe handling
Provide appropriate exhaust ventilation at places where dust is formed.

Conditions for safe storage
Keep container tightly closed in a dry and well-ventilated place.

Keep in a dry place.

8. EXPOSURE CONTROLS/PERSONAL PROTECTION

Contains no substances with occupational exposure limit values.

Personal protective equipment

Respiratory protection
Respiratory protection is not required. Where protection from nuisance levels of dusts are desired, use type N95 (US) or type P1 (EN 143) dust masks. Use respirators and components tested and approved under appropriate government standards such as NIOSH (US) or CEN (EU).

Hand protection
Handle with gloves. Gloves must be inspected prior to use. Use proper glove removal technique (without touching glove's outer surface) to avoid skin contact with this product. Dispose of contaminated gloves after use in accordance with applicable laws and good laboratory practices. Wash and dry hands.

Eye protection
Use equipment for eye protection tested and approved under appropriate government standards such as NIOSH (US) or EN 166(EU).

Skin and body protection
Choose body protection in relation to its type, to the concentration and amount of dangerous substances, and to the specific work-place., The type of protective equipment must be selected according to the concentration and amount of the dangerous substance at the specific workplace.

Hygiene measures
General industrial hygiene practice.

9. PHYSICAL AND CHEMICAL PROPERTIES

Appearance

Form	powder
Colour	white

Safety data

pH	7
Melting point/freezing point	Melting point/range: > 300 °C (> 572 °F) - lit.
Boiling point	no data available
Flash point	no data available
Ignition temperature	no data available
Autoignition temperature	no data available
Lower explosion limit	no data available
Upper explosion limit	no data available
Vapour pressure	no data available
Density	no data available
Water solubility	soluble
Partition coefficient: n-octanol/water	no data available
Relative vapour density	no data available
Odour	no data available
Odour Threshold	no data available
Evaporation rate	no data available

10. STABILITY AND REACTIVITY

Chemical stability
Stable under recommended storage conditions.

Possibility of hazardous reactions
no data available

Conditions to avoid
no data available

Materials to avoid
Strong oxidizing agents

Hazardous decomposition products
Hazardous decomposition products formed under fire conditions. - Carbon oxides, Sodium oxides
Other decomposition products - no data available

11. TOXICOLOGICAL INFORMATION

Acute toxicity

Oral LD50
no data available

Inhalation LC50

no data available

Dermal LD50
no data available

Other information on acute toxicity
no data available

Skin corrosion/irritation
no data available

Serious eye damage/eye irritation
no data available

Respiratory or skin sensitization
no data available

Germ cell mutagenicity
no data available

Carcinogenicity

IARC:	No component of this product present at levels greater than or equal to 0.1% is identified as probable, possible or confirmed human carcinogen by IARC.
ACGIH:	No component of this product present at levels greater than or equal to 0.1% is identified as a carcinogen or potential carcinogen by ACGIH.
NTP:	No component of this product present at levels greater than or equal to 0.1% is identified as a known or anticipated carcinogen by NTP.
OSHA:	No component of this product present at levels greater than or equal to 0.1% is identified as a carcinogen or potential carcinogen by OSHA.

Reproductive toxicity

no data available

Teratogenicity

no data available

Specific target organ toxicity - single exposure (Globally Harmonized System)
no data available

Specific target organ toxicity - repeated exposure (Globally Harmonized System)
no data available

Aspiration hazard
no data available

Potential health effects

Inhalation	May be harmful if inhaled. May cause respiratory tract irritation.
Ingestion	May be harmful if swallowed.
Skin	May be harmful if absorbed through skin. May cause skin irritation.
Eyes	May cause eye irritation.

Signs and Symptoms of Exposure
To the best of our knowledge, the chemical, physical, and toxicological properties have not been thoroughly investigated.

Synergistic effects
no data available

Additional Information
RTECS: Not available

12. ECOLOGICAL INFORMATION

Toxicity

no data available

Persistence and degradability
no data available

Bioaccumulative potential
no data available

Mobility in soil
no data available

PBT and vPvB assessment
no data available

Other adverse effects

no data available

13. DISPOSAL CONSIDERATIONS

Product
Offer surplus and non-recyclable solutions to a licensed disposal company.

Contaminated packaging
Dispose of as unused product.

14. TRANSPORT INFORMATION

DOT (US)
Not dangerous goods

IMDG
Not dangerous goods

IATA
Not dangerous goods

15. REGULATORY INFORMATION

OSHA Hazards
No known OSHA hazards

SARA 302 Components
SARA 302: No chemicals in this material are subject to the reporting requirements of SARA Title III, Section 302.

SARA 313 Components
SARA 313: This material does not contain any chemical components with known CAS numbers that exceed the threshold (De Minimis) reporting levels established by SARA Title III, Section 313.

SARA 311/312 Hazards
No SARA Hazards

Massachusetts Right To Know Components
No components are subject to the Massachusetts Right to Know Act.

Pennsylvania Right To Know Components

	CAS-No.	Revision Date
Sodium pyruvate	113-24-6	

New Jersey Right To Know Components

	CAS-No.	Revision Date
Sodium pyruvate	113-24-6	

California Prop. 65 Components
This product does not contain any chemicals known to State of California to cause cancer, birth defects, or any other reproductive harm.

16. OTHER INFORMATION

Further information

Copyright 2012 Sigma-Aldrich Co. LLC. License granted to make unlimited paper copies for internal use only.
The above information is believed to be correct but does not purport to be all inclusive and shall be used only as a guide. The information in this document is based on the present state of our knowledge and is applicable to the product with regard to appropriate safety precautions. It does not represent any guarantee of the properties of the product. Sigma-Aldrich Corporation and its Affiliates shall not be held liable for any damage resulting from handling or from contact with the above product. See www.sigma-aldrich.com and/or the reverse side of invoice or packing slip for additional terms and conditions of sale.

Material Safety Data Sheet

Version 3.6
Revision Date 04/24/2012
Print Date 03/31/2013

1. PRODUCT AND COMPANY IDENTIFICATION

Product name	:	L-Glutamine
Product Number	:	G8540
Brand	:	Sigma
Supplier	:	Sigma-Aldrich 3050 Spruce Street SAINT LOUIS MO 63103 USA
Telephone	:	+1 800-325-5832
Fax	:	+1 800-325-5052
Emergency Phone # (For both supplier and manufacturer)	:	(314) 776-6555
Preparation Information	:	Sigma-Aldrich Corporation Product Safety - Americas Region 1-800-521-8956

2. HAZARDS IDENTIFICATION

Emergency Overview

OSHA Hazards
No known OSHA hazards

Not a dangerous substance according to GHS.

HMIS Classification

Health hazard: 0
Flammability: 0
Physical hazards: 0

NFPA Rating

Health hazard: 0
Fire: 0
Reactivity Hazard: 0

Potential Health Effects

Inhalation	May be harmful if inhaled. May cause respiratory tract irritation.
Skin	May be harmful if absorbed through skin. May cause skin irritation.
Eyes	May cause eye irritation.
Ingestion	May be harmful if swallowed.

3. COMPOSITION/INFORMATION ON INGREDIENTS

Synonyms	:	(S)-2,5-Diamino-5-oxopentanoic acid L-Glutamic acid 5-amide
Formula	:	$C_5H_{10}N_2O_3$ $C_5H_{10}N_2O_3$
Molecular Weight	:	146.14 g/mol

No ingredients are hazardous according to OSHA criteria.

4. FIRST AID MEASURES

If inhaled
If breathed in, move person into fresh air. If not breathing, give artificial respiration.

In case of skin contact
Wash off with soap and plenty of water.

In case of eye contact
Flush eyes with water as a precaution.

If swallowed
Never give anything by mouth to an unconscious person. Rinse mouth with water.

5. FIREFIGHTING MEASURES

Conditions of flammability
Not flammable or combustible.

Suitable extinguishing media
Use water spray, alcohol-resistant foam, dry chemical or carbon dioxide.

Special protective equipment for firefighters
Wear self contained breathing apparatus for fire fighting if necessary.

Hazardous combustion products
Hazardous decomposition products formed under fire conditions. - Carbon oxides, nitrogen oxides (NOx)

6. ACCIDENTAL RELEASE MEASURES

Personal precautions
Avoid dust formation. Avoid breathing vapors, mist or gas.

Environmental precautions
Do not let product enter drains.

Methods and materials for containment and cleaning up
Sweep up and shovel. Keep in suitable, closed containers for disposal.

7. HANDLING AND STORAGE

Precautions for safe handling
Provide appropriate exhaust ventilation at places where dust is formed.

Conditions for safe storage
Keep container tightly closed in a dry and well-ventilated place.

Keep in a dry place.

8. EXPOSURE CONTROLS/PERSONAL PROTECTION

Contains no substances with occupational exposure limit values.

Personal protective equipment

Respiratory protection
Respiratory protection is not required. Where protection from nuisance levels of dusts are desired, use type N95 (US) or type P1 (EN 143) dust masks. Use respirators and components tested and approved under appropriate government standards such as NIOSH (US) or CEN (EU).

Hand protection
Handle with gloves. Gloves must be inspected prior to use. Use proper glove removal technique (without touching glove's outer surface) to avoid skin contact with this product. Dispose of contaminated gloves after use in accordance with applicable laws and good laboratory practices. Wash and dry hands.

Eye protection
Use equipment for eye protection tested and approved under appropriate government standards such as NIOSH (US) or EN 166(EU).

Skin and body protection
Choose body protection in relation to its type, to the concentration and amount of dangerous substances, and to the

specific work-place., The type of protective equipment must be selected according to the concentration and amount of the dangerous substance at the specific workplace.

Hygiene measures
General industrial hygiene practice.

9. PHYSICAL AND CHEMICAL PROPERTIES

Appearance

Form	powder
Colour	white

Safety data

pH	5.0 - 6 at 14.6 g/l at 25 °C (77 °F)
Melting point/freezing point	Melting point/range: 185 °C (365 °F)
Boiling point	no data available
Flash point	no data available
Ignition temperature	no data available
Autoignition temperature	no data available
Lower explosion limit	no data available
Upper explosion limit	no data available
Vapour pressure	no data available
Density	no data available
Water solubility	14.6 g/l at 20 °C (68 °F) - completely soluble
Partition coefficient: n-octanol/water	log Pow: -4.609
Relative vapour density	no data available
Odour	no data available
Odour Threshold	no data available
Evaporation rate	no data available

10. STABILITY AND REACTIVITY

Chemical stability
Stable under recommended storage conditions.

Possibility of hazardous reactions
no data available

Conditions to avoid
no data available

Materials to avoid
Strong oxidizing agents

Hazardous decomposition products
Hazardous decomposition products formed under fire conditions. - Carbon oxides, nitrogen oxides (NOx)
Other decomposition products - no data available

11. TOXICOLOGICAL INFORMATION

Acute toxicity

Oral LD50
LD50 Oral - rat - 7,500 mg/kg

Inhalation LC50
no data available

Dermal LD50
no data available

Other information on acute toxicity
no data available

Skin corrosion/irritation
no data available

Serious eye damage/eye irritation
no data available

Respiratory or skin sensitization
no data available

Germ cell mutagenicity
no data available

Carcinogenicity

IARC:	No component of this product present at levels greater than or equal to 0.1% is identified as probable, possible or confirmed human carcinogen by IARC.
ACGIH:	No component of this product present at levels greater than or equal to 0.1% is identified as a carcinogen or potential carcinogen by ACGIH.
NTP:	No component of this product present at levels greater than or equal to 0.1% is identified as a known or anticipated carcinogen by NTP.
OSHA:	No component of this product present at levels greater than or equal to 0.1% is identified as a carcinogen or potential carcinogen by OSHA.

Reproductive toxicity

no data available

Teratogenicity

no data available

Specific target organ toxicity - single exposure (Globally Harmonized System)
no data available

Specific target organ toxicity - repeated exposure (Globally Harmonized System)
no data available

Aspiration hazard
no data available

Potential health effects

Inhalation	May be harmful if inhaled. May cause respiratory tract irritation.
Ingestion	May be harmful if swallowed.
Skin	May be harmful if absorbed through skin. May cause skin irritation.
Eyes	May cause eye irritation.

Signs and Symptoms of Exposure
To the best of our knowledge, the chemical, physical, and toxicological properties have not been thoroughly investigated.

Synergistic effects
no data available

Additional Information
RTECS: MA2275100

12. ECOLOGICAL INFORMATION

Toxicity

no data available

Persistence and degradability
no data available

Bioaccumulative potential
no data available

Mobility in soil
no data available

PBT and vPvB assessment
no data available

Other adverse effects

no data available

13. DISPOSAL CONSIDERATIONS

Product
Offer surplus and non-recyclable solutions to a licensed disposal company.

Contaminated packaging
Dispose of as unused product.

14. TRANSPORT INFORMATION

DOT (US)
Not dangerous goods

IMDG
Not dangerous goods

IATA
Not dangerous goods

15. REGULATORY INFORMATION

OSHA Hazards
No known OSHA hazards

SARA 302 Components
SARA 302: No chemicals in this material are subject to the reporting requirements of SARA Title III, Section 302.

SARA 313 Components
SARA 313: This material does not contain any chemical components with known CAS numbers that exceed the threshold (De Minimis) reporting levels established by SARA Title III, Section 313.

SARA 311/312 Hazards
No SARA Hazards

Massachusetts Right To Know Components
No components are subject to the Massachusetts Right to Know Act.

Pennsylvania Right To Know Components

	CAS-No.	Revision Date
L-Glutamine	56-85-9	

New Jersey Right To Know Components

	CAS-No.	Revision Date
L-Glutamine	56-85-9	

California Prop. 65 Components
This product does not contain any chemicals known to State of California to cause cancer, birth defects, or any other reproductive harm.

16. OTHER INFORMATION

Further information
Copyright 2012 Sigma-Aldrich Co. LLC. License granted to make unlimited paper copies for internal use only.
The above information is believed to be correct but does not purport to be all inclusive and shall be used only as a guide. The information in this document is based on the present state of our knowledge and is applicable to the product with regard to appropriate safety precautions. It does not represent any guarantee of the properties of the product. Sigma-Aldrich Corporation and its Affiliates shall not be held liable for any damage resulting from handling or from contact with the above product. See www.sigma-aldrich.com and/or the reverse side of invoice or packing slip for additional terms and conditions of sale.

Material Safety Data Sheet

Version 4.3
Revision Date 12/31/2012
Print Date 03/31/2013

1. PRODUCT AND COMPANY IDENTIFICATION

Product name	:	Sodium bicarbonate
Product Number	:	S8875
Brand	:	Sigma-Aldrich
Supplier	:	Sigma-Aldrich 3050 Spruce Street SAINT LOUIS MO 63103 USA
Telephone	:	+1 800-325-5832
Fax	:	+1 800-325-5052
Emergency Phone # (For both supplier and manufacturer)	:	(314) 776-6555
Preparation Information	:	Sigma-Aldrich Corporation Product Safety - Americas Region 1-800-521-8956

2. HAZARDS IDENTIFICATION

Emergency Overview

OSHA Hazards
No known OSHA hazards

Not a dangerous substance or mixture according to the Globally Harmonised System (GHS).

HMIS Classification

Health hazard: 0
Flammability: 0
Physical hazards: 0

NFPA Rating

Health hazard: 0
Fire: 0
Reactivity Hazard: 0

Potential Health Effects

Inhalation	May be harmful if inhaled. May cause respiratory tract irritation.
Skin	May be harmful if absorbed through skin. May cause skin irritation.
Eyes	May cause eye irritation.
Ingestion	May be harmful if swallowed.

3. COMPOSITION/INFORMATION ON INGREDIENTS

Synonyms	:	Sodium hydrogen carbonate
Formula	:	$CHNaO_3$
Molecular Weight	:	84.01 g/mol

No ingredients are hazardous according to OHSA criteria.

4. FIRST AID MEASURES

If inhaled
If breathed in, move person into fresh air. If not breathing, give artificial respiration.

In case of skin contact
Wash off with soap and plenty of water.

In case of eye contact
Flush eyes with water as a precaution.

If swallowed
Never give anything by mouth to an unconscious person. Rinse mouth with water.

5. FIREFIGHTING MEASURES

Conditions of flammability
Not flammable or combustible.

Suitable extinguishing media
Use water spray, alcohol-resistant foam, dry chemical or carbon dioxide.

Special protective equipment for firefighters
Wear self contained breathing apparatus for fire fighting if necessary.

Hazardous combustion products
Hazardous decomposition products formed under fire conditions. - Carbon oxides, Sodium oxides

6. ACCIDENTAL RELEASE MEASURES

Personal precautions
Avoid dust formation. Avoid breathing vapors, mist or gas.

Environmental precautions
Do not let product enter drains.

Methods and materials for containment and cleaning up
Sweep up and shovel. Keep in suitable, closed containers for disposal.

7. HANDLING AND STORAGE

Precautions for safe handling
Provide appropriate exhaust ventilation at places where dust is formed.

Conditions for safe storage
Keep container tightly closed in a dry and well-ventilated place.

8. EXPOSURE CONTROLS/PERSONAL PROTECTION

Contains no substances with occupational exposure limit values.

Personal protective equipment

Respiratory protection
Respiratory protection is not required. Where protection from nuisance levels of dusts are desired, use type N95 (US) or type P1 (EN 143) dust masks. Use respirators and components tested and approved under appropriate government standards such as NIOSH (US) or CEN (EU).

Hand protection
Handle with gloves. Gloves must be inspected prior to use. Use proper glove removal technique (without touching glove's outer surface) to avoid skin contact with this product. Dispose of contaminated gloves after use in accordance with applicable laws and good laboratory practices. Wash and dry hands.

Full contact
Material: Nitrile rubber
Minimum layer thickness: 0.11 mm
Break through time: 480 min
Material tested:Dermatril® (KCL 740 / Aldrich Z677272, Size M)

Splash protection
Material: Nitrile rubber

Minimum layer thickness: 0.11 mm
Break through time: 480 min
Material tested:Dermatril® (KCL 740 / Aldrich Z677272, Size M)

data source: KCL GmbH, D-36124 Eichenzell, phone +49 (0)6659 87300, e-mail sales@kcl.de, test method: EN374
If used in solution, or mixed with other substances, and under conditions which differ from EN 374, contact the supplier of the CE approved gloves. This recommendation is advisory only and must be evaluated by an Industrial Hygienist familiar with the specific situation of anticipated use by our customers. It should not be construed as offering an approval for any specific use scenario.

Eye protection
Use equipment for eye protection tested and approved under appropriate government standards such as NIOSH (US) or EN 166(EU).

Skin and body protection
Choose body protection in relation to its type, to the concentration and amount of dangerous substances, and to the specific work-place., The type of protective equipment must be selected according to the concentration and amount of the dangerous substance at the specific workplace.

Hygiene measures
General industrial hygiene practice.

9. PHYSICAL AND CHEMICAL PROPERTIES

Appearance

Form	crystalline
Colour	no data available

Safety data

pH	no data available
Melting point/freezing point	300 °C (572 °F)
Boiling point	no data available
Flash point	no data available
Ignition temperature	no data available
Auto-ignition temperature	no data available
Lower explosion limit	no data available
Upper explosion limit	no data available
Vapour pressure	no data available
Density	2.160 g/cm3
Water solubility	50 g/l
Partition coefficient: n-octanol/water	no data available
Relative vapor density	no data available
Odour	no data available
Odour Threshold	no data available
Evaporation rate	no data available

10. STABILITY AND REACTIVITY

Chemical stability
Stable under recommended storage conditions.

Possibility of hazardous reactions
no data available

Conditions to avoid
Exposure to moisture.

Materials to avoid
Strong acids, Strong oxidizing agents

Hazardous decomposition products
Hazardous decomposition products formed under fire conditions. - Carbon oxides, Sodium oxides
Other decomposition products - no data available

11. TOXICOLOGICAL INFORMATION

Acute toxicity

Oral LD50
LD50 Oral - rat - 4,220 mg/kg

Inhalation LC50
no data available

Dermal LD50
no data available

Other information on acute toxicity
no data available

Skin corrosion/irritation
Skin - Human - Mild skin irritation - 3 d

Serious eye damage/eye irritation
Eyes - rabbit - Mild eye irritation - 30 s

Respiratory or skin sensitization
no data available

Germ cell mutagenicity
no data available

Carcinogenicity

IARC:	No component of this product present at levels greater than or equal to 0.1% is identified as probable, possible or confirmed human carcinogen by IARC.
ACGIH:	No component of this product present at levels greater than or equal to 0.1% is identified as a carcinogen or potential carcinogen by ACGIH.
NTP:	No component of this product present at levels greater than or equal to 0.1% is identified as a known or anticipated carcinogen by NTP.
OSHA:	No component of this product present at levels greater than or equal to 0.1% is identified as a carcinogen or potential carcinogen by OSHA.

Reproductive toxicity

no data available

Teratogenicity

no data available

Specific target organ toxicity - single exposure (Globally Harmonized System)
no data available

Specific target organ toxicity - repeated exposure (Globally Harmonized System)
no data available

Aspiration hazard
no data available

Potential health effects

Inhalation	May be harmful if inhaled. May cause respiratory tract irritation.
Ingestion	May be harmful if swallowed.
Skin	May be harmful if absorbed through skin. May cause skin irritation.
Eyes	May cause eye irritation.

Signs and Symptoms of Exposure
Exposure to large amounts can cause:, Gastrointestinal disturbance, Heavy or prolonged skin exposure may result in the absorption of harmful amounts of material.

Synergistic effects
no data available

Additional Information
RTECS: VZ0950000

12. ECOLOGICAL INFORMATION

Toxicity

no data available

Persistence and degradability
no data available

Bioaccumulative potential
no data available

Mobility in soil
no data available

PBT and vPvB assessment
no data available

Other adverse effects

no data available

13. DISPOSAL CONSIDERATIONS

Product
Offer surplus and non-recyclable solutions to a licensed disposal company.

Contaminated packaging
Dispose of as unused product.

14. TRANSPORT INFORMATION

DOT (US)
Not dangerous goods

IMDG
Not dangerous goods

IATA
Not dangerous goods

15. REGULATORY INFORMATION

OSHA Hazards
No known OSHA hazards

SARA 302 Components
SARA 302: No chemicals in this material are subject to the reporting requirements of SARA Title III, Section 302.

SARA 313 Components
SARA 313: This material does not contain any chemical components with known CAS numbers that exceed the threshold (De Minimis) reporting levels established by SARA Title III, Section 313.

SARA 311/312 Hazards
No SARA Hazards

Massachusetts Right To Know Components
No components are subject to the Massachusetts Right to Know Act.

Pennsylvania Right To Know Components

	CAS-No.	Revision Date
Sodium hydrogencarbonate	144-55-8	

New Jersey Right To Know Components

	CAS-No.	Revision Date
Sodium hydrogencarbonate	144-55-8	

California Prop. 65 Components
This product does not contain any chemicals known to State of California to cause cancer, birth defects, or any other reproductive harm.

16. OTHER INFORMATION

Further information
Copyright 2012 Sigma-Aldrich Co. LLC. License granted to make unlimited paper copies for internal use only.
The above information is believed to be correct but does not purport to be all inclusive and shall be used only as a guide. The information in this document is based on the present state of our knowledge and is applicable to the product with regard to appropriate safety precautions. It does not represent any guarantee of the properties of the product. Sigma-Aldrich Corporation and its Affiliates shall not be held liable for any damage resulting from handling or from contact with the above product. See www.sigma-aldrich.com and/or the reverse side of invoice or packing slip for additional terms and conditions of sale.

SIGMA-ALDRICH®

sigma-aldrich.com

3050 Spruce Street, Saint Louis, MO 63103, USA
Website: www.sigmaaldrich.com
Email USA: techserv@sial.com
Outside USA: eurtechserv@sial.com

Product Specification

Product Name:
Kolliphor® P 188 - solid, suitable for cell culture, suitable for insect cell culture, suitable for plant cell culture

Product Number: **K4894**
CAS Number: 9003-11-6

Formula: (C3H6O.C2H4O)x

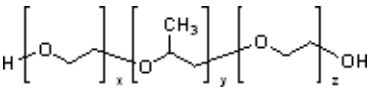

TEST	Specification
Appearance (Color)	White
Appearance (Form) Prill/Cast Solid	Conforms
Solubility (Color)	Colorless
Solubility (Turbidity) 100 mg/ml H2O	Clear
Cloud Point 10% Solution	≥ 100 °C
Brookfield Viscosity at 77 deg C	700 - 1300 cps
pH 2.5% solution	5.0 - 7.5
Water Content	≤ 0.75 %
COLOR TEST (APHA) (50:50 in MeOH)	≤ 100
Cell Culture Test	Pass
Insect Cell Test	Pass
Plant Cell Culture Test	Pass
Note Kolliphor is a registered trademark of BASF	----------
Recommended Retest Period 2 years	----------

Specification: PRD.3.ZQ5.10000023427

Sigma-Aldrich warrants, that at the time of the quality release or subsequent retest date this product conformed to the information contained in this publication. The current Specification sheet may be available at Sigma-Aldrich.com. For further inquiries, please contact Technical Service. Purchaser must determine the suitability of the product for its particular use. See reverse side of invoice or packing slip for additional terms and conditions of sale.

Material Safety Data Sheet

Version 4.2
Revision Date 05/08/2012
Print Date 03/31/2013

1. PRODUCT AND COMPANY IDENTIFICATION

Product name	:	Pluronic® F-68
Product Number	:	P1300
Brand	:	Sigma
Supplier	:	Sigma-Aldrich 3050 Spruce Street SAINT LOUIS MO 63103 USA
Telephone	:	+1 800-325-5832
Fax	:	+1 800-325-5052
Emergency Phone # (For both supplier and manufacturer)	:	(314) 776-6555
Preparation Information	:	Sigma-Aldrich Corporation Product Safety - Americas Region 1-800-521-8956

2. HAZARDS IDENTIFICATION

Emergency Overview

OSHA Hazards
No known OSHA hazards

GHS Classification
Skin irritation (Category 3)

GHS Label elements, including precautionary statements

Pictogram	none
Signal word	Warning
Hazard statement(s) H316	Causes mild skin irritation.
Precautionary statement(s)	none

HMIS Classification

Health hazard:	1
Flammability:	0
Physical hazards:	0

NFPA Rating

Health hazard:	1
Fire:	0
Reactivity Hazard:	0

Potential Health Effects

Inhalation	May be harmful if inhaled. May cause respiratory tract irritation.
Skin	May be harmful if absorbed through skin. May cause skin irritation.
Eyes	May cause eye irritation.
Ingestion	May be harmful if swallowed.

3. COMPOSITION/INFORMATION ON INGREDIENTS

Synonyms	:	Polyoxyethylene-polyoxypropylene block copolymer
Formula	:	(C3H6O.C2H4O)x

No ingredients are hazardous according to OSHA criteria.

4. FIRST AID MEASURES

General advice
Consult a physician. Show this safety data sheet to the doctor in attendance.

If inhaled
If breathed in, move person into fresh air. If not breathing, give artificial respiration. Consult a physician.

In case of skin contact
Wash off with soap and plenty of water. Consult a physician.

In case of eye contact
Flush eyes with water as a precaution.

If swallowed
Never give anything by mouth to an unconscious person. Rinse mouth with water. Consult a physician.

5. FIREFIGHTING MEASURES

Conditions of flammability
Not flammable or combustible.

Suitable extinguishing media
Use water spray, alcohol-resistant foam, dry chemical or carbon dioxide.

Special protective equipment for firefighters
Wear self contained breathing apparatus for fire fighting if necessary.

Hazardous combustion products
Hazardous decomposition products formed under fire conditions. - Carbon oxides

6. ACCIDENTAL RELEASE MEASURES

Personal precautions
Use personal protective equipment. Avoid dust formation. Avoid breathing vapors, mist or gas. Ensure adequate ventilation. Avoid breathing dust.

Environmental precautions
Do not let product enter drains.

Methods and materials for containment and cleaning up
Pick up and arrange disposal without creating dust. Sweep up and shovel. Keep in suitable, closed containers for disposal.

7. HANDLING AND STORAGE

Precautions for safe handling
Provide appropriate exhaust ventilation at places where dust is formed.

Conditions for safe storage
Keep container tightly closed in a dry and well-ventilated place.

8. EXPOSURE CONTROLS/PERSONAL PROTECTION

Contains no substances with occupational exposure limit values.

Personal protective equipment

Respiratory protection
Respiratory protection is not required. Where protection from nuisance levels of dusts are desired, use type N95 (US) or type P1 (EN 143) dust masks. Use respirators and components tested and approved under appropriate government standards such as NIOSH (US) or CEN (EU).

Hand protection
Handle with gloves. Gloves must be inspected prior to use. Use proper glove removal technique (without touching glove's outer surface) to avoid skin contact with this product. Dispose of contaminated gloves after use in accordance with applicable laws and good laboratory practices. Wash and dry hands.

Eye protection
Safety glasses with side-shields conforming to EN166 Use equipment for eye protection tested and approved under appropriate government standards such as NIOSH (US) or EN 166(EU).

Skin and body protection
Choose body protection in relation to its type, to the concentration and amount of dangerous substances, and to the specific work-place., The type of protective equipment must be selected according to the concentration and amount of the dangerous substance at the specific workplace.

Hygiene measures
Handle in accordance with good industrial hygiene and safety practice. Wash hands before breaks and at the end of workday.

9. PHYSICAL AND CHEMICAL PROPERTIES

Appearance

Form	solid
Colour	colourless

Safety data

pH	6.0 - 7
Melting point/freezing point	no data available
Boiling point	no data available
Flash point	no data available
Ignition temperature	no data available
Autoignition temperature	no data available
Lower explosion limit	no data available
Upper explosion limit	no data available
Vapour pressure	no data available
Density	no data available
Water solubility	no data available
Partition coefficient: n-octanol/water	no data available
Relative vapour density	no data available
Odour	no data available
Odour Threshold	no data available
Evaporation rate	no data available

10. STABILITY AND REACTIVITY

Chemical stability
Stable under recommended storage conditions.

Possibility of hazardous reactions
no data available

Conditions to avoid
no data available

Materials to avoid
Strong oxidizing agents

Hazardous decomposition products
Hazardous decomposition products formed under fire conditions. - Carbon oxides
Other decomposition products - no data available

11. TOXICOLOGICAL INFORMATION

Acute toxicity

Oral LD50
LD50 Oral - rat - 9,380 mg/kg

LD50 Oral - mouse - 15,000 mg/kg

Inhalation LC50
no data available

Dermal LD50
LD50 Dermal - rabbit - 20,000 mg/kg

Other information on acute toxicity
no data available

Skin corrosion/irritation
Skin - rabbit - Mild skin irritation - 24 h

Serious eye damage/eye irritation
Eyes - rabbit - Mild eye irritation - 24 h

Eyes - rabbit - No eye irritation - OECD Test Guideline 405

Respiratory or skin sensitization
rabbit - Did not cause sensitization on laboratory animals.

Germ cell mutagenicity
Tests on bacterial or mammalian cell cultures did not show mutagenic effects.

Carcinogenicity

IARC:	No component of this product present at levels greater than or equal to 0.1% is identified as probable, possible or confirmed human carcinogen by IARC.
ACGIH:	No component of this product present at levels greater than or equal to 0.1% is identified as a carcinogen or potential carcinogen by ACGIH.
NTP:	No component of this product present at levels greater than or equal to 0.1% is identified as a known or anticipated carcinogen by NTP.
OSHA:	No component of this product present at levels greater than or equal to 0.1% is identified as a carcinogen or potential carcinogen by OSHA.

Reproductive toxicity

no data available

Teratogenicity

no data available

Specific target organ toxicity - single exposure (Globally Harmonized System)
no data available

Specific target organ toxicity - repeated exposure (Globally Harmonized System)
no data available

Aspiration hazard
no data available

Potential health effects

Inhalation	May be harmful if inhaled. May cause respiratory tract irritation.
Ingestion	May be harmful if swallowed.
Skin	May be harmful if absorbed through skin. May cause skin irritation.
Eyes	May cause eye irritation.

Signs and Symptoms of Exposure
Effects due to ingestion may include:, Diarrhoea, Weakness, To the best of our knowledge, the chemical, physical, and toxicological properties have not been thoroughly investigated.

Synergistic effects
no data available

Additional Information
RTECS: MD0911050

12. ECOLOGICAL INFORMATION

Toxicity

Toxicity to fish	static test LC50 - other fish - > 10,000 mg/l - 96 h Method: OECD Test Guideline 203

Persistence and degradability
no data available

Bioaccumulative potential
Bioaccumulation is unlikely.

Mobility in soil
no data available

PBT and vPvB assessment
no data available

Other adverse effects

no data available

13. DISPOSAL CONSIDERATIONS

Product
Offer surplus and non-recyclable solutions to a licensed disposal company.

Contaminated packaging
Dispose of as unused product.

14. TRANSPORT INFORMATION

DOT (US)
Not dangerous goods

IMDG
Not dangerous goods

IATA
Not dangerous goods

15. REGULATORY INFORMATION

OSHA Hazards
No known OSHA hazards

SARA 302 Components
SARA 302: No chemicals in this material are subject to the reporting requirements of SARA Title III, Section 302.

SARA 313 Components
SARA 313: This material does not contain any chemical components with known CAS numbers that exceed the threshold (De Minimis) reporting levels established by SARA Title III, Section 313.

SARA 311/312 Hazards
No SARA Hazards

Massachusetts Right To Know Components
No components are subject to the Massachusetts Right to Know Act.

Pennsylvania Right To Know Components

	CAS-No.	Revision Date
Polyethylene glycol, propoxylated	9003-11-6	

New Jersey Right To Know Components

	CAS-No.	Revision Date
Polyethylene glycol, propoxylated	9003-11-6	

California Prop. 65 Components
This product does not contain any chemicals known to State of California to cause cancer, birth defects, or any other reproductive harm.

16. OTHER INFORMATION

Further information
Copyright 2012 Sigma-Aldrich Co. LLC. License granted to make unlimited paper copies for internal use only.
The above information is believed to be correct but does not purport to be all inclusive and shall be used only as a guide. The information in this document is based on the present state of our knowledge and is applicable to the product with regard to appropriate safety precautions. It does not represent any guarantee of the properties of the product. Sigma-Aldrich Corporation and its Affiliates shall not be held liable for any damage resulting from handling or from contact with the above product. See www.sigma-aldrich.com and/or the reverse side of invoice or packing slip for additional terms and conditions of sale.

Material Safety Data Sheet

Version 4.9
Revision Date 02/19/2013
Print Date 03/31/2013

1. PRODUCT AND COMPANY IDENTIFICATION

Product name	:	Triton™ X-100
Product Number	:	X100
Brand	:	Sigma-Aldrich
Supplier	:	Sigma-Aldrich 3050 Spruce Street SAINT LOUIS MO 63103 USA
Telephone	:	+1 800-325-5832
Fax	:	+1 800-325-5052
Emergency Phone # (For both supplier and manufacturer)	:	(314) 776-6555
Preparation Information	:	Sigma-Aldrich Corporation Product Safety - Americas Region 1-800-521-8956

2. HAZARDS IDENTIFICATION

Emergency Overview

OSHA Hazards
Harmful by ingestion., Irritant

GHS Classification
Acute toxicity, Oral (Category 4)
Skin irritation (Category 3)
Eye irritation (Category 2A)
Acute aquatic toxicity (Category 2)
Chronic aquatic toxicity (Category 2)

GHS Label elements, including precautionary statements

Pictogram

Signal word Warning

Hazard statement(s)

H302	Harmful if swallowed.
H316	Causes mild skin irritation.
H319	Causes serious eye irritation.
H411	Toxic to aquatic life with long lasting effects.

Precautionary statement(s)

P273	Avoid release to the environment.
P305 + P351 + P338	IF IN EYES: Rinse cautiously with water for several minutes. Remove contact lenses, if present and easy to do. Continue rinsing.

HMIS Classification

Health hazard:	2
Flammability:	1
Physical hazards:	0

NFPA Rating

Health hazard:	2

Fire: 1
Reactivity Hazard: 0

Health hazard: 2
Fire: 1
Reactivity Hazard: 0

Potential Health Effects

Inhalation May be harmful if inhaled. Causes respiratory tract irritation.
Skin Harmful if absorbed through skin. Causes skin irritation.
Eyes Causes eye irritation.
Ingestion Harmful if swallowed.

3. COMPOSITION/INFORMATION ON INGREDIENTS

Synonyms : t-Octylphenoxypolyethoxyethanol
4-(1,1,3,3-Tetramethylbutyl)phenyl-polyethylene glycol
Polyethylene glycol tert-octylphenyl ether

Formula : $(C_2H_4O)_nC_{14}H_{22}O$

Component		Concentration
p-tertiary-Octylphenoxy polyethyl alcohol		
CAS-No.	9002-93-1	90 - 100 %

4. FIRST AID MEASURES

General advice
Consult a physician. Show this safety data sheet to the doctor in attendance.Move out of dangerous area.

If inhaled
If breathed in, move person into fresh air. If not breathing, give artificial respiration. Consult a physician.

In case of skin contact
Wash off with soap and plenty of water. Consult a physician.

In case of eye contact
Rinse thoroughly with plenty of water for at least 15 minutes and consult a physician.

If swallowed
Never give anything by mouth to an unconscious person. Rinse mouth with water. Consult a physician.

5. FIREFIGHTING MEASURES

Conditions of flammability
Not flammable or combustible.

Suitable extinguishing media
Use water spray, alcohol-resistant foam, dry chemical or carbon dioxide.

Special protective equipment for firefighters
Wear self contained breathing apparatus for fire fighting if necessary.

Hazardous combustion products
Hazardous decomposition products formed under fire conditions. - Carbon oxides

6. ACCIDENTAL RELEASE MEASURES

Personal precautions
Use personal protective equipment. Avoid breathing vapours, mist or gas. Ensure adequate ventilation.

Environmental precautions
Prevent further leakage or spillage if safe to do so. Do not let product enter drains. Discharge into the environment must be avoided.

Methods and materials for containment and cleaning up
Soak up with inert absorbent material and dispose of as hazardous waste. Keep in suitable, closed containers for disposal.

7. HANDLING AND STORAGE

Precautions for safe handling
Avoid contact with skin and eyes. Avoid inhalation of vapour or mist.

Conditions for safe storage
Keep container tightly closed in a dry and well-ventilated place. Containers which are opened must be carefully resealed and kept upright to prevent leakage.

Packaged under inert gas.

8. EXPOSURE CONTROLS/PERSONAL PROTECTION

Contains no substances with occupational exposure limit values.

Personal protective equipment

Respiratory protection
Where risk assessment shows air-purifying respirators are appropriate use a full-face respirator with multi-purpose combination (US) or type ABEK (EN 14387) respirator cartridges as a backup to engineering controls. If the respirator is the sole means of protection, use a full-face supplied air respirator. Use respirators and components tested and approved under appropriate government standards such as NIOSH (US) or CEN (EU).

Hand protection
Handle with gloves. Gloves must be inspected prior to use. Use proper glove removal technique (without touching glove's outer surface) to avoid skin contact with this product. Dispose of contaminated gloves after use in accordance with applicable laws and good laboratory practices. Wash and dry hands.

Full contact
Material: Nitrile rubber
Minimum layer thickness: 0.11 mm
Break through time: 480 min
Material tested:Dermatril® (KCL 740 / Aldrich Z677272, Size M)

Splash contact
Material: Nitrile rubber
Minimum layer thickness: 0.11 mm
Break through time: 480 min
Material tested:Dermatril® (KCL 740 / Aldrich Z677272, Size M)

data source: KCL GmbH, D-36124 Eichenzell, phone +49 (0)6659 87300, e-mail sales@kcl.de, test method: EN374
If used in solution, or mixed with other substances, and under conditions which differ from EN 374, contact the supplier of the CE approved gloves. This recommendation is advisory only and must be evaluated by an industrial hygienist and safety officer familiar with the specific situation of anticipated use by our customers. It should not be construed as offering an approval for any specific use scenario.

Eye protection
Face shield and safety glasses Use equipment for eye protection tested and approved under appropriate government standards such as NIOSH (US) or EN 166(EU).

Skin and body protection
Complete suit protecting against chemicals, The type of protective equipment must be selected according to the concentration and amount of the dangerous substance at the specific workplace.

Hygiene measures
Handle in accordance with good industrial hygiene and safety practice. Wash hands before breaks and at the end of workday.

9. PHYSICAL AND CHEMICAL PROPERTIES

Appearance

Form	liquid, clear

Colour	light yellow

Safety data

pH	9.7
Melting point/freezing point	6 °C (43 °F)
Boiling point	> 200 °C (> 392 °F)
Flash point	251 °C (484 °F) - closed cup
Ignition temperature	no data available
Auto-ignition temperature	no data available
Lower explosion limit	no data available
Upper explosion limit	no data available
Vapour pressure	< 1.33 hPa (< 1.00 mmHg) at 20 °C (68 °F)
Density	1.0700 g/cm3
Water solubility	soluble
Partition coefficient: n-octanol/water	no data available
Relative vapour density	no data available
Odour	no data available
Odour Threshold	no data available
Evapouration rate	no data available

10. STABILITY AND REACTIVITY

Chemical stability
Stable under recommended storage conditions.

Possibility of hazardous reactions
no data available

Conditions to avoid
no data available

Materials to avoid
Strong acids, Strong bases, Strong oxidizing agents

Hazardous decomposition products
Hazardous decomposition products formed under fire conditions. - Carbon oxides
Other decomposition products - no data available

11. TOXICOLOGICAL INFORMATION

Acute toxicity

Oral LD50
LD50 Oral - rat - 1,800 mg/kg

Inhalation LC50
no data available

Dermal LD50
LD50 Dermal - rabbit - 8,000 mg/kg

Other information on acute toxicity
no data available

Skin corrosion/irritation

no data available

Serious eye damage/eye irritation
Eyes - rabbit - Moderate eye irritation - 24 h

Respiratory or skin sensitisation
no data available

Germ cell mutagenicity
no data available

Carcinogenicity

IARC:	No component of this product present at levels greater than or equal to 0.1% is identified as probable, possible or confirmed human carcinogen by IARC.
ACGIH:	No component of this product present at levels greater than or equal to 0.1% is identified as a carcinogen or potential carcinogen by ACGIH.
NTP:	No component of this product present at levels greater than or equal to 0.1% is identified as a known or anticipated carcinogen by NTP.
OSHA:	No component of this product present at levels greater than or equal to 0.1% is identified as a carcinogen or potential carcinogen by OSHA.

Reproductive toxicity

no data available

Teratogenicity

no data available

Specific target organ toxicity - single exposure (Globally Harmonized System)
no data available

Specific target organ toxicity - repeated exposure (Globally Harmonized System)
no data available

Aspiration hazard
no data available

Potential health effects

Inhalation	May be harmful if inhaled. Causes respiratory tract irritation.
Ingestion	Harmful if swallowed.
Skin	Harmful if absorbed through skin. Causes skin irritation.
Eyes	Causes eye irritation.

Signs and Symptoms of Exposure
To the best of our knowledge, the chemical, physical, and toxicological properties have not been thoroughly investigated.

Synergistic effects
no data available

Additional Information
RTECS: MD0907700

12. ECOLOGICAL INFORMATION

Toxicity

Toxicity to fish	LC50 - Pimephales promelas (fathead minnow) - 8.9 mg/l - 96.0 h
Toxicity to daphnia and other aquatic invertebrates	EC50 - Daphnia - 26 mg/l - 48 h

Persistence and degradability

Biodegradability	Biotic/Aerobic Biochemical oxygen demand Result: 36 % - Not readily biodegradable. Method: Closed Bottle test

Bioaccumulative potential
no data available

Mobility in soil
no data available

PBT and vPvB assessment
no data available

Other adverse effects

Chemical Oxygen Demand (COD)	2.19 mg/g

An environmental hazard cannot be excluded in the event of unprofessional handling or disposal.

Toxic to aquatic life with long lasting effects.

13. DISPOSAL CONSIDERATIONS

Product
Offer surplus and non-recyclable solutions to a licensed disposal company. Contact a licensed professional waste disposal service to dispose of this material.

Contaminated packaging
Dispose of as unused product.

14. TRANSPORT INFORMATION

DOT (US)
UN number: 3082 Class: 9 Packing group: III
Proper shipping name: Environmentally hazardous substances, liquid, n.o.s. (p-tertiary-Octylphenoxy polyethyl alcohol)
Reportable Quantity (RQ):
Marine pollutant: Marine pollutant
Poison Inhalation Hazard: No

IMDG
UN number: 3082 Class: 9 Packing group: III EMS-No: F-A, S-F
Proper shipping name: ENVIRONMENTALLY HAZARDOUS SUBSTANCE, LIQUID, N.O.S. (p-tertiary-Octylphenoxy polyethyl alcohol)
Marine pollutant: No

IATA
UN number: 3082 Class: 9 Packing group: III
Proper shipping name: Environmentally hazardous substance, liquid, n.o.s. (p-tertiary-Octylphenoxy polyethyl alcohol)

15. REGULATORY INFORMATION

OSHA Hazards
Harmful by ingestion., Irritant

SARA 302 Components
SARA 302: No chemicals in this material are subject to the reporting requirements of SARA Title III, Section 302.

SARA 313 Components
SARA 313: This material does not contain any chemical components with known CAS numbers that exceed the threshold (De Minimis) reporting levels established by SARA Title III, Section 313.

SARA 311/312 Hazards
Acute Health Hazard

Massachusetts Right To Know Components
No components are subject to the Massachusetts Right to Know Act.

Pennsylvania Right To Know Components

	CAS-No.	Revision Date
p-tertiary-Octylphenoxy polyethyl alcohol	9002-93-1	

New Jersey Right To Know Components

	CAS-No.	Revision Date
p-tertiary-Octylphenoxy polyethyl alcohol	9002-93-1	

California Prop. 65 Components

This product does not contain any chemicals known to State of California to cause cancer, birth defects, or any other reproductive harm.

16. OTHER INFORMATION

Further information

Copyright 2013 Sigma-Aldrich Co. LLC. License granted to make unlimited paper copies for internal use only.
The above information is believed to be correct but does not purport to be all inclusive and shall be used only as a guide. The information in this document is based on the present state of our knowledge and is applicable to the product with regard to appropriate safety precautions. It does not represent any guarantee of the properties of the product. Sigma-Aldrich Corporation and its Affiliates shall not be held liable for any damage resulting from handling or from contact with the above product. See www.sigma-aldrich.com and/or the reverse side of invoice or packing slip for additional terms and conditions of sale.

SAFETY DATA SHEET

1. Identification of the substance/mixture and of the company/undertaking

Identification of the substance/preparation

Product code 11300027
Product name Grace's Insect Cell Culture Medium, powder

Company/Undertaking Identification

Life Technologies
5791 VAN ALLEN WAY
PO BOX 6482
CARLSBAD, CA 92008
+1 760 603 7200

INVITROGEN CORPORATION
5250 MAINWAY DRIVE
BURLINGTON, ONT
CANADA L7L 6A4
800/263-6236

24 hour Emergency Response (Transport): 866-536-0631
301-431-8585
Outside of the U.S. +1-301-431-8585

For research use only. Not intended for human or animal diagnostic or therapeutic uses.

2. Hazards identification

GHS - Classification

Signal Word
not hazardous

Health Hazard
not hazardous

Physical Hazards
not hazardous

Principle Routes of Exposure/ Potential Health effects

Eyes	May cause eye irritation with susceptible persons.
Skin	May cause skin irritation in susceptible persons.
Inhalation	May be harmful by inhalation.
Ingestion	May be harmful if swallowed.

Specific effects

Carcinogenic effects	none
Mutagenic effects	none
Reproductive toxicity	none
Sensitization	none
Target Organ Effects	No known effects under normal use conditions.

HMIS

Health	0
Flammability	0
Reactivity	0

3. Composition/information on ingredients

The product contains no substances which at their given concentration, are considered to be hazardous to health. We recommend handling all chemicals with caution.

4. First aid measures

Skin contact	Rinse with plenty of water. If symptoms arise, call a physician.
Eye contact	Rinse immediately with plenty of water, also under the eyelids, for at least 15 minutes. If symptoms persist, call a physician.
Ingestion	Never give anything by mouth to an unconscious person. If symptoms persist, call a physician. Do not induce vomiting without medical advice.
Inhalation	Move to fresh air. If symptoms persist, call a physician. If not breathing, give artificial respiration.
Notes to physician	Treat symptomatically.

5. Fire-fighting measures

Suitable extinguishing media	Water spray. Carbon dioxide (CO2). Foam. Dry chemical.
Special protective equipment for firefighters	Wear self-contained breathing apparatus and protective suit.

6. Accidental release measures

Personal precautions	Use personal protective equipment.
Methods for cleaning up	Take up mechanically and collect in suitable container for disposal.

Environmental precautions

Prevent further leakage or spillage if safe to do so.

See Section 12 for additional information.

7. Handling and storage

Handling	Always wear reccommended Personal Protective Equipment. No special handling advice required.
Storage	Keep in a dry, cool and well-ventilated place.

8. Exposure controls/personal protection

Exposure limits

The product does not contain any hazardous materials with occupational exposure limits established.

Engineering measures Ensure adequate ventilation, especially in confined areas.

Personal protective equipment

Respiratory protection	In case of insufficient ventilation wear suitable respiratory equipment.
Hand protection	Impervious gloves.
Eye protection	Safety glasses with side-shields.
Skin and body protection.	Lightweight protective clothing.
Hygiene measures	Handle in accordance with good industrial hygiene and safety practice.

Environmental exposure controls Prevent product from entering drains.

9. Physical and chemical properties

General Information

Form	powder	
Appearance	No information available	
Odor	No information available	
Boiling Point/Range	**°C** no data available	**°F** no data available
Melting point/range	**°C** no data available	**°F** no data available
Flash point	**°C** no data available	**°F** no data available
Autoignition temperature	**°C** no data available	**°F** no data available
Oxidizing properties	No information available.	
Water solubility	no data available	

10. Stability and reactivity

Stability	Stable under normal conditions.
Materials to avoid	No dangerous reaction known under conditions of normal use.
Hazardous decomposition products	None under normal use
polymerization	Hazardous polymerisation does not occur.

11. Toxicological information

Acute toxicity

not hazardous

Principle Routes of Exposure/ Potential Health effects

Eyes	May cause eye irritation with susceptible persons.
Skin	May cause skin irritation in susceptible persons.
Inhalation	May be harmful by inhalation.
Ingestion	May be harmful if swallowed.
Carcinogenic effects	none
Mutagenic effects	none
Reproductive toxicity	none
Sensitization	none
Target Organ Effects	No known effects under normal use conditions.

12. Ecological information

Ecotoxicity effects	No information available.
Mobility	No information available.
Biodegradation	Inherently biodegradable
Bioaccumulation	Does not bioaccumulate.

13. Disposal considerations

Dispose of in accordance with local regulations.

14. Transport information

IATA

Proper shipping name	Not classified as dangerous in the meaning of transport regulations
Hazard class	none
Subsidiary Class	none
Packing group	none
UN-No	None

15. Regulatory information

U.S. Federal Regulations

SARA 313
This product is not regulated by SARA.

Clean Air Act, Section 112 Hazardous Air Pollutants (HAPs) (see 40 CFR 61)
This product does not contains HAPs.

U.S. State Regulations

California Proposition 65
This product does not contain chemicals listed under Proposition 65

WHMIS hazard class:
Non-controlled

This product has been classified according to the hazard criteria of the CPR and the MSDS contains all of the information required by the CPR

16. Other information

Reason for Revision (M)SDS sections updated.

For research use only. Not intended for human or animal diagnostic or therapeutic uses.

The above information was acquired by diligent search and/or investigation and the recommendations are based on prudent application of professional judgment. The information shall not be taken as being all inclusive and is to be used only as a guide. All materials and mixtures may present unkown hazards and should be used with caution. Since the Company cannot control the actual methods, volumes, or conditions of use, the Company shall not be held liable for any damages or losses resulting from the handling or from contact with the product as described herein. THE INFORMATION IN THIS MSDS DOES NOT CONSTITUTE A WARRENTY, EXPRESSED OR IMPLIED, INCLUDING ANY IMPLIED WARRANTY OF MERCHANTABILITY OR FITNESS FOR ANY PARTICULAR PUPOSE.

End of Safety Data Sheet

1. PRODUCT AND COMPANY INFORMATION

INVITROGEN CORPORATION
1600 FARADAY AVE.
CARLSBAD, CA 92008
760/603-7200

GIBCO PRODUCTS
INVITROGEN CORPORATION
3175 STALEY ROAD P.O. BOX 68
GRAND ISLAND, NY 14072
716/774-6700

INVITROGEN CORPORATION
3 FOUNTAIN DR.
INCHINNAN BUSINESS PARK
PAISLEY, PA4 9RF
SCOTLAND
44-141 814-6100

INVITROGEN CORPORATION
P.O. BOX 12-502
PENROSE
AUCKLAND 1135
NEW ZEALAND
64-9-579-3024

INVITROGEN CORPORATION
2270 INDUSTRIAL ST.
BURLINGTON, ONT
CANADA L7P 1A1
905/335-2255

INVITROGEN AUSTRALIA PTY LIMITED
2A/14 LIONEL ROAD
MOUNT WAVERLY VIC 3149
AUSTRALIA
1-800-331-627

EMERGENCY NUMBER (SPILLS, EXPOSURES): 301/431-8585 (24 HOUR)
800/451-8346 (24 HOUR)
NON-EMERGENCY INFORMATION: 800/955-6288

Product Name: GRACE'S INSECT CELL CULTURE MEDIUM, POWDER
Stock Number: 11300

NOTE: If this product is a kit or is supplied with more than one material, please refer to the MSDS for each component for hazard information.

Product Use:
These products are for laboratory research use only and are not intended for human or animal diagnostics, therapeutic, or other clinical uses.

Synonyms:
Not available.

2. COMPOSITION, INFORMATION ON INGREDIENTS

The following list shows components of this product classified as hazardous based on physical properties and health effects:

Component	CAS No.	Percent
L-GLUTAMINE	56-85-9	0.5 - 1.5

3. HAZARDS IDENTIFICATION

********** EMERGENCY OVERVIEW **********
Occupational exposure presents little or no health hazard.
****

Potential Health Effects:
Eye:
Can cause minor irritation, tearing and reddening.

Skin:
Can cause minor skin irritation, defatting, and dermatitis.

Inhalation:
Can cause minor respiratory irritation, dizziness, weakness, fatigue, nausea, and headache.
No toxicity expected from inhalation.

Ingestion:
Mildly irritating to mouth, throat, and stomach. Can cause abdominal discomfort.

Chronic:
No data on cancer.

4. FIRST AID MEASURES

Eye:
Use an eye wash to remove a chemical from your eye regardless of the level of hazard. Flush the affected eye for at least twenty minutes. Tilt the head to prevent chemical from transferring to the uncontaminated eye. Seek medical advice after flushing.

Skin:
Wash with soap and water. Get medical attention if irritation develops or persists.

Inhalation:
Remove to fresh air. If breathing is difficult, have a trained individual administer oxygen.

Ingestion:
Minimal risk of harm if swallowed. Do not induce vomiting. Seek medical attention immediately. Provide medical care provider with this MSDS.

Note To Physician:
Treat symptomatically.

5. FIRE FIGHTING MEASURES

Flashpoint Deg C:
Not available.

Upper Flammable Limit %:
Not available.

Lower Flammable Limit %:
Not available.

Autoignition Temperature Deg C:
Not available.

Extinguishing Media:
Use alcohol resistant foam, carbon dioxide, or dry chemical when fighting fires. Water or foam may cause frothing if liquid is burning but it still may be a useful extinguishing agent if carefully applied to the surface of the fire. Do Not direct a stream of water into the hot burning liquid. Use water spray/fog for cooling.

Firefighting Techniques/Equipment:
Do not enter fire area without proper protection including self-contained breathing apparatus and full protective equipment. Fight fire from a safe distance and a protected location due to the potential of hazardous vapors and decomposition products.

Hazardous Combustion Products:
Includes carbon dioxide, carbon monoxide, dense smoke.

6. ACCIDENTAL RELEASE MEASURES

Accidental releases may be subject to special reporting requirements and other regulatory mandates. Refer to Section 8 for personal protection equipment recommendations.

Spill Cleanup:
No health affects expected from the clean-up of this material if contact can be avoided. Follow personal protective equipment recommendations found in Section VIII of this MSDS .
No special spill clean-up considerations. Collect and discard in regular trash.

7. HANDLING AND STORAGE

Storage of some materials is regulated by federal, state, and/or local laws.

Storage Pressure:
Ambient

7. HANDLING AND STORAGE (CONT.)

Handling Procedures:
Mildly irritating material. Avoid unnecessary exposure.
Keep closed or covered when not in use.

Storage Procedures:
Store in a cool dry place. Isolate from incompatible materials.
Suitable for most general chemical storage areas.

8. EXPOSURE CONTROLS, PERSONAL PROTECTION

Exposure Limits:

Component	OSHA PEL (ppm)	AGCIH TWA (ppm)
L-GLUTAMINE	Not established.	Not established.

Engineering Controls:
No exposure limits exist for the constituents of this product. General room ventilation might be required to maintain operator comfort under normal conditions of use.

Personal Protective Equipment:

Eye:
Safety glasses should be the minimum eye protection.
Wear chemical goggles.

Skin:
Not normally considered a skin hazard. Where use can result in skin contact, practice good personal hygiene and wear a barrier cream and/or impervious surgical style gloves. Wash hands and other exposed areas with mild soap and water before eating, drinking, and when leaving work.
Gloves should be used as minimum hand protection.

Respiratory:
No respiratory protection will be needed under normal industrial operating conditions.

9. PHYSICAL AND CHEMICAL PROPERTIES

Appearance/physical state:	Powder.
Odor:	No odor.
	Not established.
	Not established.
	Not established.
	Not established.

9. PHYSICAL AND CHEMICAL PROPERTIES (CONT.)

Not established.
Not established.
Not established.
Octanol/water Partition Coeff: Not established.
Volatiles: Not established.
Not established.
Not established.

10. STABILITY AND REACTIVITY

Stability:
Stable under normal conditions.

Conditions to Avoid:
Strong oxidizing agents.

Hazardous Decomposition Products:
Carbon monoxide. Carbon dioxide. Toxic gases. Nitrogen oxides. Hydrogen chloride.

Hazardous Polymerization:
Hazardous polymerization will not occur.

11. TOXICOLOGICAL INFORMATION

Acute Toxicity:

Dermal/Skin:
Not determined.

Inhalation/Respiratory:
Not determined.

Oral/Ingestion:
L-GLUTAMINE: 7500 MG/KG

Target Organs: No data found.

Carcinogenicity:

NTP:
Not tested.

IARC:
Not listed.

11. TOXICOLOGICAL INFORMATION (CONT.)

OSHA:
Not regulated.

Other Toxicological Information

12. Ecological Information

Ecotoxicological Information: No ecological information available.

Environmental Fate (Degradation, Transformation, and Persistence):
Bioconcentration is not expected to occur.

13. DISPOSAL CONSIDERATIONS

Regulatory Information:
Not applicable.

Disposal Method:
Clean up and dispose of waste in accordance with all federal, state, and local environmental regulations.

14. TRANSPORT INFORMATION

Proper Shipping Name: Not Determined.
Subsidiary Hazards:

15. REGULATORY INFORMATION

UNITED STATES:

TSCA:
This product is solely for research and development purposes only and may not be used, processed or distributed for a commercial purpose. It may only be handled by technically qualified individuals.

Prop 65 Listed Chemicals:	PROP 65	PERCENT
No Prop 65 Chemicals.		

No 313 Chemicals

CANADA:

15. REGULATORY INFORMATION (CONT.)

DSL/NDSL:
Not determined.

COMPONENT	WHMIS Classification
L-GLUTAMINE	Not classified as hazardous.

EUROPEAN UNION:

PRODUCT RISK PHRASES:
None assigned.

PRODUCT SAFETY PHRASES:
Not applicable.

PRODUCT CLASSIFICATION:
Not classified as hazardous

Component	EINECS Number
L-GLUTAMINE	200-292-1

16. OTHER INFORMATION

HMIS Rating 0-4:
FIRE: Not determined.
HEALTH: Not determined.
REACTIVITY: Not determined.

Abbreviations
N/A - Data is not applicable or not available
SARA - Superfund and Reauthorization Act
HMIS - Hazard Material Information System
WHMIS - Workplace Hazard Materials Information System
NTP - National Toxicology Program
OSHA - Occupational Health and Safety Administration
IARC - International Agency for Research on Cancer
PROP 65 - California Safe Drinking Water and Toxic Enforcement Act of 1986
EINECS - European Inventory of Existing Commercial Chemical Substances

The above information was acquired by diligent search and/or investigation and the recommendations are based on prudent application of professional judgment. The information shall not be taken as being all inclusive and is to be used only as a guide. All materials and mixtures may present unknown hazards and should be used with caution. Since Invitrogen Corporation cannot control the actual methods, volumes, or conditions of use, the Company shall not be held liable for any damages or losses resulting from the handling or from contact with the product as described herein. THE INFORMATION IN THIS

16. OTHER INFORMATION (CONT.)

MSDS DOES NOT CONSTITUTE A WARRANTY, EXPRESS OR IMPLIED, INCLUDING ANY IMPLIED WARRANTY OF MERCHANTABILITY OR FITNESS FOR ANY PARTICULAR PURPOSE.

Material Safety Data Sheet

Version 5.0
Revision Date 12/03/2012
Print Date 03/31/2013

1. PRODUCT AND COMPANY IDENTIFICATION

Product name	:	Tributyl phosphate
Product Number	:	240494
Brand	:	Aldrich
Supplier	:	Sigma-Aldrich 3050 Spruce Street SAINT LOUIS MO 63103 USA
Telephone	:	+1 800-325-5832
Fax	:	+1 800-325-5052
Emergency Phone # (For both supplier and manufacturer)	:	(314) 776-6555
Preparation Information	:	Sigma-Aldrich Corporation Product Safety - Americas Region 1-800-521-8956

2. HAZARDS IDENTIFICATION

Emergency Overview

OSHA Hazards
Target Organ Effect, Harmful by ingestion., Irritant, Carcinogen

Target Organs

Blood, Central nervous system

GHS Classification
Acute toxicity, Inhalation (Category 4)
Acute toxicity, Dermal (Category 5)
Acute toxicity, Oral (Category 4)
Skin irritation (Category 2)
Eye irritation (Category 2B)
Carcinogenicity (Category 2)
Acute aquatic toxicity (Category 2)

GHS Label elements, including precautionary statements

Pictogram

Signal word: Warning

Hazard statement(s)

H302 + H332	Harmful if swallowed or if inhaled
H313	May be harmful in contact with skin.
H315 + H320	Causes skin and eye irritation.
H351	Suspected of causing cancer.
H401	Toxic to aquatic life.

Precautionary statement(s)

P281	Use personal protective equipment as required.
P305 + P351 + P338	IF IN EYES: Rinse cautiously with water for several minutes. Remove contact lenses, if present and easy to do. Continue rinsing.

HMIS Classification

Health hazard:	2
Chronic Health Hazard:	*
Flammability:	1
Physical hazards:	0

NFPA Rating

Health hazard:	3
Fire:	1
Reactivity Hazard:	0

Potential Health Effects

Inhalation	May be harmful if inhaled. Causes respiratory tract irritation.
Skin	Harmful if absorbed through skin. Causes skin irritation.
Eyes	Causes eye irritation.
Ingestion	Harmful if swallowed.

3. COMPOSITION/INFORMATION ON INGREDIENTS

Formula	:	$C_{12}H_{27}O_4P$
Molecular Weight	:	266.31 g/mol

Component		Concentration
Tributyl phosphate		
CAS-No.	126-73-8	-
EC-No.	204-800-2	
Index-No.	015-014-00-2	

4. FIRST AID MEASURES

General advice
Consult a physician. Show this safety data sheet to the doctor in attendance.Move out of dangerous area.

If inhaled
If breathed in, move person into fresh air. If not breathing, give artificial respiration. Consult a physician.

In case of skin contact
Wash off with soap and plenty of water. Consult a physician.

In case of eye contact
Rinse thoroughly with plenty of water for at least 15 minutes and consult a physician.

If swallowed
Never give anything by mouth to an unconscious person. Rinse mouth with water. Consult a physician.

5. FIREFIGHTING MEASURES

Conditions of flammability
Not flammable or combustible.

Suitable extinguishing media
Use water spray, alcohol-resistant foam, dry chemical or carbon dioxide.

Special protective equipment for firefighters
Wear self contained breathing apparatus for fire fighting if necessary.

Hazardous combustion products
Hazardous decomposition products formed under fire conditions. - Carbon oxides, Oxides of phosphorus

6. ACCIDENTAL RELEASE MEASURES

Personal precautions
Use personal protective equipment. Avoid breathing vapors, mist or gas. Ensure adequate ventilation. Evacuate personnel to safe areas.

Environmental precautions
Prevent further leakage or spillage if safe to do so. Do not let product enter drains. Discharge into the environment must be avoided.

Methods and materials for containment and cleaning up
Soak up with inert absorbent material and dispose of as hazardous waste. Keep in suitable, closed containers for disposal.

7. HANDLING AND STORAGE

Precautions for safe handling
Avoid contact with skin and eyes. Avoid inhalation of vapour or mist.

Conditions for safe storage
Keep container tightly closed in a dry and well-ventilated place. Containers which are opened must be carefully resealed and kept upright to prevent leakage.

8. EXPOSURE CONTROLS/PERSONAL PROTECTION

Components with workplace control parameters

Components	CAS-No.	Value	Control parameters	Basis
Tributyl phosphate	126-73-8	TWA	0.2 ppm	USA. ACGIH Threshold Limit Values (TLV)
Remarks	Eye & Upper Respiratory Tract irritation Headache Nausea Substances for which there is a Biological Exposure Index or Indices (see BEI® section), see BEI® for Acetylcholinesterase Inhibiting Pesticide			
		TWA	0.2 ppm 2.5 mg/m3	USA. OSHA - TABLE Z-1 Limits for Air Contaminants - 1910.1000
		TWA	5 mg/m3	USA. Occupational Exposure Limits (OSHA) - Table Z-1 Limits for Air Contaminants
		TWA	0.2 ppm 2.5 mg/m3	USA. NIOSH Recommended Exposure Limits

Personal protective equipment

Respiratory protection
Where risk assessment shows air-purifying respirators are appropriate use a full-face respirator with multi-purpose combination (US) or type ABEK (EN 14387) respirator cartridges as a backup to engineering controls. If the respirator is the sole means of protection, use a full-face supplied air respirator. Use respirators and components tested and approved under appropriate government standards such as NIOSH (US) or CEN (EU).

Hand protection
Handle with gloves. Gloves must be inspected prior to use. Use proper glove removal technique (without touching glove's outer surface) to avoid skin contact with this product. Dispose of contaminated gloves after use in accordance with applicable laws and good laboratory practices. Wash and dry hands.

Full contact
Material: butyl-rubber
Minimum layer thickness: 0.3 mm
Break through time: 480 min
Material tested:Butoject® (KCL 897 / Aldrich Z677647, Size M)

Splash protection
Material: butyl-rubber
Minimum layer thickness: 0.3 mm
Break through time: 480 min
Material tested:Butoject® (KCL 897 / Aldrich Z677647, Size M)

data source: KCL GmbH, D-36124 Eichenzell, phone +49 (0)6659 87300, e-mail sales@kcl.de, test method: EN374

If used in solution, or mixed with other substances, and under conditions which differ from EN 374, contact the supplier of the CE approved gloves. This recommendation is advisory only and must be evaluated by an Industrial Hygienist familiar with the specific situation of anticipated use by our customers. It should not be construed as offering an approval for any specific use scenario.

Eye protection
Face shield and safety glasses Use equipment for eye protection tested and approved under appropriate government standards such as NIOSH (US) or EN 166(EU).

Skin and body protection
Complete suit protecting against chemicals, The type of protective equipment must be selected according to the concentration and amount of the dangerous substance at the specific workplace.

Hygiene measures
Handle in accordance with good industrial hygiene and safety practice. Wash hands before breaks and at the end of workday.

9. PHYSICAL AND CHEMICAL PROPERTIES

Appearance

Form	liquid
Colour	colourless

Safety data

pH	no data available
Melting point/freezing point	Melting point/range: -79 °C (-110 °F) - lit.
Boiling point	180 - 183 °C (356 - 361 °F) at 29 hPa (22 mmHg) - lit.
Flash point	145 °C (293 °F) - closed cup
Ignition temperature	410 °C (770 °F)
Auto-ignition temperature	no data available
Lower explosion limit	no data available
Upper explosion limit	no data available
Vapour pressure	36 hPa (27 mmHg) at 178 °C (352 °F) 9.7 hPa (7.3 mmHg) at 150 °C (302 °F)
Density	0.979 g/cm3 at 25 °C (77 °F)
Water solubility	no data available
Partition coefficient: n-octanol/water	no data available
Relative vapor density	9.19 - (Air = 1.0)
Odour	no data available
Odour Threshold	no data available
Evaporation rate	no data available

10. STABILITY AND REACTIVITY

Chemical stability
Stable under recommended storage conditions.

Possibility of hazardous reactions
no data available

Conditions to avoid
no data available

Materials to avoid
Strong oxidizing agents, Strong bases

Hazardous decomposition products
Hazardous decomposition products formed under fire conditions. - Carbon oxides, Oxides of phosphorus
Other decomposition products - no data available

11. TOXICOLOGICAL INFORMATION

Acute toxicity

Oral LD50
LD50 Oral - rat - 1,552 mg/kg

Inhalation LC50
LC50 Inhalation - rat - 1 h - 28,000 mg/m3

Dermal LD50
LD50 Dermal - rabbit - > 3,100 mg/kg

Other information on acute toxicity
no data available

Skin corrosion/irritation
Skin - rabbit - Mild skin irritation

Serious eye damage/eye irritation
Eyes - rabbit - Mild eye irritation

Respiratory or skin sensitization
no data available

Germ cell mutagenicity

no data available

Carcinogenicity

Carcinogenicity - rat - Oral
Tumorigenic:Neoplastic by RTECS criteria. Kidney, Ureter, Bladder:Tumors.

Carcinogenicity - mouse - Oral
Tumorigenic:Neoplastic by RTECS criteria. Liver:Tumors.

Limited evidence of carcinogenicity in animal studies

IARC:	No component of this product present at levels greater than or equal to 0.1% is identified as probable, possible or confirmed human carcinogen by IARC.
ACGIH:	No component of this product present at levels greater than or equal to 0.1% is identified as a carcinogen or potential carcinogen by ACGIH.
NTP:	No component of this product present at levels greater than or equal to 0.1% is identified as a known or anticipated carcinogen by NTP.
OSHA:	No component of this product present at levels greater than or equal to 0.1% is identified as a carcinogen or potential carcinogen by OSHA.

Reproductive toxicity
Reproductive toxicity - rat - Oral
Effects on Newborn: Growth statistics (e.g., reduced weight gain).

no data available

Teratogenicity

Developmental Toxicity - rat - Oral
Effects on Embryo or Fetus: Fetotoxicity (except death, e.g., stunted fetus).

no data available

Specific target organ toxicity - single exposure (Globally Harmonized System)
no data available

Specific target organ toxicity - repeated exposure (Globally Harmonized System)
no data available

Aspiration hazard
no data available

Potential health effects

Inhalation	May be harmful if inhaled. Causes respiratory tract irritation.
Ingestion	Harmful if swallowed.
Skin	Harmful if absorbed through skin. Causes skin irritation.
Eyes	Causes eye irritation.

Signs and Symptoms of Exposure
CNS stimulation., To the best of our knowledge, the chemical, physical, and toxicological properties have not been thoroughly investigated.

Synergistic effects
no data available

Additional Information
RTECS: TC7700000

12. ECOLOGICAL INFORMATION

Toxicity

Toxicity to fish	LC50 - Carassius auratus (goldfish) - 8.8 mg/l - 96 h
Toxicity to daphnia and other aquatic invertebrates	EC50 - Daphnia magna (Water flea) - 3.6 mg/l - 48 h
Toxicity to algae	EC50 - Desmodesmus subspicatus (green algae) - 1.1 mg/l - 72 h

Persistence and degradability

Bioaccumulative potential

Bioaccumulation	Oryzias latipes - 38 d Bioconcentration factor (BCF): 21 - 35

Mobility in soil
no data available

PBT and vPvB assessment
no data available

Other adverse effects

An environmental hazard cannot be excluded in the event of unprofessional handling or disposal.

Toxic to aquatic life.

no data available

13. DISPOSAL CONSIDERATIONS

Product
Offer surplus and non-recyclable solutions to a licensed disposal company. Contact a licensed professional waste disposal service to dispose of this material. Dissolve or mix the material with a combustible solvent and burn in a chemical incinerator equipped with an afterburner and scrubber.

Contaminated packaging
Dispose of as unused product.

14. TRANSPORT INFORMATION

DOT (US)
Not dangerous goods

IMDG
Not dangerous goods

IATA
Not dangerous goods

15. REGULATORY INFORMATION

OSHA Hazards
Target Organ Effect, Harmful by ingestion., Irritant, Carcinogen

SARA 302 Components
SARA 302: No chemicals in this material are subject to the reporting requirements of SARA Title III, Section 302.

SARA 313 Components
SARA 313: This material does not contain any chemical components with known CAS numbers that exceed the threshold (De Minimis) reporting levels established by SARA Title III, Section 313.

SARA 311/312 Hazards
Acute Health Hazard, Chronic Health Hazard

Massachusetts Right To Know Components

	CAS-No.	Revision Date
Tributyl phosphate	126-73-8	1993-04-24

Pennsylvania Right To Know Components

	CAS-No.	Revision Date
Tributyl phosphate	126-73-8	1993-04-24

New Jersey Right To Know Components

	CAS-No.	Revision Date
Tributyl phosphate	126-73-8	1993-04-24

California Prop. 65 Components
This product does not contain any chemicals known to State of California to cause cancer, birth defects, or any other reproductive harm.

16. OTHER INFORMATION

Further information
Copyright 2012 Sigma-Aldrich Co. LLC. License granted to make unlimited paper copies for internal use only.
The above information is believed to be correct but does not purport to be all inclusive and shall be used only as a guide. The information in this document is based on the present state of our knowledge and is applicable to the product with regard to appropriate safety precautions. It does not represent any guarantee of the properties of the product. Sigma-Aldrich Corporation and its Affiliates shall not be held liable for any damage resulting from handling or from contact with the above product. See www.sigma-aldrich.com and/or the reverse side of invoice or packing slip for additional terms and conditions of sale.

Material Safety Data Sheet

Version 5.0
Revision Date 12/03/2012
Print Date 03/31/2013

1. PRODUCT AND COMPANY IDENTIFICATION

Product name	:	Tributyl phosphate
Product Number	:	240494
Brand	:	Aldrich
Supplier	:	Sigma-Aldrich 3050 Spruce Street SAINT LOUIS MO 63103 USA
Telephone	:	+1 800-325-5832
Fax	:	+1 800-325-5052
Emergency Phone # (For both supplier and manufacturer)	:	(314) 776-6555
Preparation Information	:	Sigma-Aldrich Corporation Product Safety - Americas Region 1-800-521-8956

2. HAZARDS IDENTIFICATION

Emergency Overview

OSHA Hazards
Target Organ Effect, Harmful by ingestion., Irritant, Carcinogen

Target Organs

Blood, Central nervous system

GHS Classification
Acute toxicity, Inhalation (Category 4)
Acute toxicity, Dermal (Category 5)
Acute toxicity, Oral (Category 4)
Skin irritation (Category 2)
Eye irritation (Category 2B)
Carcinogenicity (Category 2)
Acute aquatic toxicity (Category 2)

GHS Label elements, including precautionary statements

Pictogram

Signal word: Warning

Hazard statement(s)

H302 + H332	Harmful if swallowed or if inhaled
H313	May be harmful in contact with skin.
H315 + H320	Causes skin and eye irritation.
H351	Suspected of causing cancer.
H401	Toxic to aquatic life.

Precautionary statement(s)

P281	Use personal protective equipment as required.
P305 + P351 + P338	IF IN EYES: Rinse cautiously with water for several minutes. Remove contact lenses, if present and easy to do. Continue rinsing.

HMIS Classification

Health hazard:	2
Chronic Health Hazard:	*
Flammability:	1
Physical hazards:	0

NFPA Rating

Health hazard:	3
Fire:	1
Reactivity Hazard:	0

Potential Health Effects

Inhalation	May be harmful if inhaled. Causes respiratory tract irritation.
Skin	Harmful if absorbed through skin. Causes skin irritation.
Eyes	Causes eye irritation.
Ingestion	Harmful if swallowed.

3. COMPOSITION/INFORMATION ON INGREDIENTS

Formula	:	$C_{12}H_{27}O_4P$
Molecular Weight	:	266.31 g/mol

Component		Concentration
Tributyl phosphate		
CAS-No.	126-73-8	-
EC-No.	204-800-2	
Index-No.	015-014-00-2	

4. FIRST AID MEASURES

General advice
Consult a physician. Show this safety data sheet to the doctor in attendance.Move out of dangerous area.

If inhaled
If breathed in, move person into fresh air. If not breathing, give artificial respiration. Consult a physician.

In case of skin contact
Wash off with soap and plenty of water. Consult a physician.

In case of eye contact
Rinse thoroughly with plenty of water for at least 15 minutes and consult a physician.

If swallowed
Never give anything by mouth to an unconscious person. Rinse mouth with water. Consult a physician.

5. FIREFIGHTING MEASURES

Conditions of flammability
Not flammable or combustible.

Suitable extinguishing media
Use water spray, alcohol-resistant foam, dry chemical or carbon dioxide.

Special protective equipment for firefighters
Wear self contained breathing apparatus for fire fighting if necessary.

Hazardous combustion products
Hazardous decomposition products formed under fire conditions. - Carbon oxides, Oxides of phosphorus

6. ACCIDENTAL RELEASE MEASURES

Personal precautions
Use personal protective equipment. Avoid breathing vapors, mist or gas. Ensure adequate ventilation. Evacuate personnel to safe areas.

Environmental precautions
Prevent further leakage or spillage if safe to do so. Do not let product enter drains. Discharge into the environment must be avoided.

Methods and materials for containment and cleaning up
Soak up with inert absorbent material and dispose of as hazardous waste. Keep in suitable, closed containers for disposal.

7. HANDLING AND STORAGE

Precautions for safe handling
Avoid contact with skin and eyes. Avoid inhalation of vapour or mist.

Conditions for safe storage
Keep container tightly closed in a dry and well-ventilated place. Containers which are opened must be carefully resealed and kept upright to prevent leakage.

8. EXPOSURE CONTROLS/PERSONAL PROTECTION

Components with workplace control parameters

Components	CAS-No.	Value	Control parameters	Basis
Tributyl phosphate	126-73-8	TWA	0.2 ppm	USA. ACGIH Threshold Limit Values (TLV)
Remarks	Eye & Upper Respiratory Tract irritation Headache Nausea Substances for which there is a Biological Exposure Index or Indices (see BEI® section), see BEI® for Acetylcholinesterase Inhibiting Pesticide			
		TWA	0.2 ppm 2.5 mg/m3	USA. OSHA - TABLE Z-1 Limits for Air Contaminants - 1910.1000
		TWA	5 mg/m3	USA. Occupational Exposure Limits (OSHA) - Table Z-1 Limits for Air Contaminants
		TWA	0.2 ppm 2.5 mg/m3	USA. NIOSH Recommended Exposure Limits

Personal protective equipment

Respiratory protection
Where risk assessment shows air-purifying respirators are appropriate use a full-face respirator with multi-purpose combination (US) or type ABEK (EN 14387) respirator cartridges as a backup to engineering controls. If the respirator is the sole means of protection, use a full-face supplied air respirator. Use respirators and components tested and approved under appropriate government standards such as NIOSH (US) or CEN (EU).

Hand protection
Handle with gloves. Gloves must be inspected prior to use. Use proper glove removal technique (without touching glove's outer surface) to avoid skin contact with this product. Dispose of contaminated gloves after use in accordance with applicable laws and good laboratory practices. Wash and dry hands.

Full contact
Material: butyl-rubber
Minimum layer thickness: 0.3 mm
Break through time: 480 min
Material tested:Butoject® (KCL 897 / Aldrich Z677647, Size M)

Splash protection
Material: butyl-rubber
Minimum layer thickness: 0.3 mm
Break through time: 480 min
Material tested:Butoject® (KCL 897 / Aldrich Z677647, Size M)

data source: KCL GmbH, D-36124 Eichenzell, phone +49 (0)6659 87300, e-mail sales@kcl.de, test method: EN374

If used in solution, or mixed with other substances, and under conditions which differ from EN 374, contact the supplier of the CE approved gloves. This recommendation is advisory only and must be evaluated by an Industrial Hygienist familiar with the specific situation of anticipated use by our customers. It should not be construed as offering an approval for any specific use scenario.

Eye protection
Face shield and safety glasses Use equipment for eye protection tested and approved under appropriate government standards such as NIOSH (US) or EN 166(EU).

Skin and body protection
Complete suit protecting against chemicals, The type of protective equipment must be selected according to the concentration and amount of the dangerous substance at the specific workplace.

Hygiene measures
Handle in accordance with good industrial hygiene and safety practice. Wash hands before breaks and at the end of workday.

9. PHYSICAL AND CHEMICAL PROPERTIES

Appearance

Form	liquid
Colour	colourless

Safety data

pH	no data available
Melting point/freezing point	Melting point/range: -79 °C (-110 °F) - lit.
Boiling point	180 - 183 °C (356 - 361 °F) at 29 hPa (22 mmHg) - lit.
Flash point	145 °C (293 °F) - closed cup
Ignition temperature	410 °C (770 °F)
Auto-ignition temperature	no data available
Lower explosion limit	no data available
Upper explosion limit	no data available
Vapour pressure	36 hPa (27 mmHg) at 178 °C (352 °F) 9.7 hPa (7.3 mmHg) at 150 °C (302 °F)
Density	0.979 g/cm3 at 25 °C (77 °F)
Water solubility	no data available
Partition coefficient: n-octanol/water	no data available
Relative vapor density	9.19 - (Air = 1.0)
Odour	no data available
Odour Threshold	no data available
Evaporation rate	no data available

10. STABILITY AND REACTIVITY

Chemical stability
Stable under recommended storage conditions.

Possibility of hazardous reactions
no data available

Conditions to avoid
no data available

Materials to avoid
Strong oxidizing agents, Strong bases

Hazardous decomposition products
Hazardous decomposition products formed under fire conditions. - Carbon oxides, Oxides of phosphorus
Other decomposition products - no data available

11. TOXICOLOGICAL INFORMATION

Acute toxicity

Oral LD50
LD50 Oral - rat - 1,552 mg/kg

Inhalation LC50
LC50 Inhalation - rat - 1 h - 28,000 mg/m3

Dermal LD50
LD50 Dermal - rabbit - > 3,100 mg/kg

Other information on acute toxicity
no data available

Skin corrosion/irritation
Skin - rabbit - Mild skin irritation

Serious eye damage/eye irritation
Eyes - rabbit - Mild eye irritation

Respiratory or skin sensitization
no data available

Germ cell mutagenicity

no data available

Carcinogenicity

Carcinogenicity - rat - Oral
Tumorigenic:Neoplastic by RTECS criteria. Kidney, Ureter, Bladder:Tumors.

Carcinogenicity - mouse - Oral
Tumorigenic:Neoplastic by RTECS criteria. Liver:Tumors.

Limited evidence of carcinogenicity in animal studies

IARC:	No component of this product present at levels greater than or equal to 0.1% is identified as probable, possible or confirmed human carcinogen by IARC.
ACGIH:	No component of this product present at levels greater than or equal to 0.1% is identified as a carcinogen or potential carcinogen by ACGIH.
NTP:	No component of this product present at levels greater than or equal to 0.1% is identified as a known or anticipated carcinogen by NTP.
OSHA:	No component of this product present at levels greater than or equal to 0.1% is identified as a carcinogen or potential carcinogen by OSHA.

Reproductive toxicity
Reproductive toxicity - rat - Oral
Effects on Newborn: Growth statistics (e.g., reduced weight gain).

no data available

Teratogenicity

Developmental Toxicity - rat - Oral
Effects on Embryo or Fetus: Fetotoxicity (except death, e.g., stunted fetus).

no data available

Specific target organ toxicity - single exposure (Globally Harmonized System)
no data available

Specific target organ toxicity - repeated exposure (Globally Harmonized System)
no data available

Aspiration hazard
no data available

Potential health effects

Inhalation	May be harmful if inhaled. Causes respiratory tract irritation.
Ingestion	Harmful if swallowed.
Skin	Harmful if absorbed through skin. Causes skin irritation.
Eyes	Causes eye irritation.

Signs and Symptoms of Exposure
CNS stimulation., To the best of our knowledge, the chemical, physical, and toxicological properties have not been thoroughly investigated.

Synergistic effects
no data available

Additional Information
RTECS: TC7700000

12. ECOLOGICAL INFORMATION

Toxicity

Toxicity to fish	LC50 - Carassius auratus (goldfish) - 8.8 mg/l - 96 h
Toxicity to daphnia and other aquatic invertebrates	EC50 - Daphnia magna (Water flea) - 3.6 mg/l - 48 h
Toxicity to algae	EC50 - Desmodesmus subspicatus (green algae) - 1.1 mg/l - 72 h

Persistence and degradability

Bioaccumulative potential

Bioaccumulation	Oryzias latipes - 38 d Bioconcentration factor (BCF): 21 - 35

Mobility in soil
no data available

PBT and vPvB assessment
no data available

Other adverse effects

An environmental hazard cannot be excluded in the event of unprofessional handling or disposal.

Toxic to aquatic life.

no data available

13. DISPOSAL CONSIDERATIONS

Product
Offer surplus and non-recyclable solutions to a licensed disposal company. Contact a licensed professional waste disposal service to dispose of this material. Dissolve or mix the material with a combustible solvent and burn in a chemical incinerator equipped with an afterburner and scrubber.

Contaminated packaging
Dispose of as unused product.

14. TRANSPORT INFORMATION

DOT (US)
Not dangerous goods

IMDG
Not dangerous goods

IATA
Not dangerous goods

15. REGULATORY INFORMATION

OSHA Hazards
Target Organ Effect, Harmful by ingestion., Irritant, Carcinogen

SARA 302 Components
SARA 302: No chemicals in this material are subject to the reporting requirements of SARA Title III, Section 302.

SARA 313 Components
SARA 313: This material does not contain any chemical components with known CAS numbers that exceed the threshold (De Minimis) reporting levels established by SARA Title III, Section 313.

SARA 311/312 Hazards
Acute Health Hazard, Chronic Health Hazard

Massachusetts Right To Know Components

	CAS-No.	Revision Date
Tributyl phosphate	126-73-8	1993-04-24

Pennsylvania Right To Know Components

	CAS-No.	Revision Date
Tributyl phosphate	126-73-8	1993-04-24

New Jersey Right To Know Components

	CAS-No.	Revision Date
Tributyl phosphate	126-73-8	1993-04-24

California Prop. 65 Components
This product does not contain any chemicals known to State of California to cause cancer, birth defects, or any other reproductive harm.

16. OTHER INFORMATION

Further information
Copyright 2012 Sigma-Aldrich Co. LLC. License granted to make unlimited paper copies for internal use only.
The above information is believed to be correct but does not purport to be all inclusive and shall be used only as a guide. The information in this document is based on the present state of our knowledge and is applicable to the product with regard to appropriate safety precautions. It does not represent any guarantee of the properties of the product. Sigma-Aldrich Corporation and its Affiliates shall not be held liable for any damage resulting from handling or from contact with the above product. See www.sigma-aldrich.com and/or the reverse side of invoice or packing slip for additional terms and conditions of sale.

Material Safety Data Sheet

Section 1. Chemical Product and Company Identification

Product Name Formalin Solution 10% Neutral Buff. pH 7.0	Product Code 28600
Manufacturer's Name StatLab Medical Products, Inc.	Emergency Telephone Numbe 800-424-9300
Address (Number, Street, City, State, and ZIP Code 407 Interchange st.	Telephone Number for Informatio 800-442-3573 x 2
McKinney Tx 75071	Date Preparec 10/14/2003 (rev 10/20/05)
	Signature of Preparer (optional

Section 2. Composition/Information on Ingredients

Component	CAS #	OSHA PEL	ACGIH TLV	Other Limits Recommended	Percent
Formaldehyde	50-00-0	0.75 ppm	C 0.3 mg/m^3		3-4
Methyl Alcohol	67-56-1	200 ppm	250 ppm		1-1.5
Sodium Phosphate Monobasic Monohydrate	10049-21-5	N/A	N/A		<1
Sodium Phosphate Dibasic	7558-79-4	N/A	N/A		<1
Water, Deionized	7732-18-5	N/A	N/A		Balance

Section 3. Hazards Identification

Emergency Overview

Contains Formaldehyde, a suspected carcinogen. Irritating to the eyes, respiratory system and skin. May cause sensitization by inhalation or skin contact. May be fatal if swallowed. If ingested, dilute with water, induce vomiting then call a physician. Wash areas of contact with water. If inhaled, remove to fresh air.

Potential Health Effects

Target Organs: Eyes, skin, respiratory system.

Eye: Causes irritation, redness and pain.

Skin: May cause irritation, redness and pain. Frequent or prolonged exposure may cause hypersensitivity leading to contact dermatitis.

Ingestion: May cause severe abdominal pain, vomiting, headache and diarrhea.

Inhalation: Causes irritation of respiratory tract. Symptoms may include sore throat, coughing and shortness of breath.

Chronic/Carcinogenicity: IARC-Formaldehyde is probably carcinogenic. NTP-Formaldehyde is reasonably anticipated to be a carcinogen. OSHA-Yes (Formaldehyde)

Teratology: Mutation data cited in "Registry of Toxic Effects of Chemical Substances" on Formaldehyde.

Reproduction: Reproductive effects cited in "Registry of Toxic Effects of Chemical Substances" on Formaldehyde.

Mutagenicity:

Section 4. First Aid Measures

Eye: Irrigate immediately with large quantity of water for at least 15 minutes.

Skin: Flush with water for at least 15 minutes.

Ingestion: Dilute immediately with water or milk. Induce vomiting. Call a physician.

Inhalation: Remove to fresh air. Give artificial respiration if necessary.

All Other Means of Exposure: CONTACT POISON CONTROL CENTER IMMEDIATELY. Be prepared to provide hazardous ingredient information from Section 2.

Section 5. Fire Fighting Measures

Flammable Properties	Flash Point	N/A	Method	N/A
Flammable Limits	Lower	N/A	Upper	N/A

Autoignition Temperature:

Hazardous Combustion Products:

Extinguishing Media: Use any means suitable for extinguishing the surrounding fire. (Water spray, dry chemical, alcohol foam, or carbon dioxide.)

Fire & Explosion Hazards: Not considered to be a fire or explosion hazard.

Fire Fighting Instructions: Use normal procedures/instructions.

Fire Fighting Equipment: Use protective clothing and breathing equipment appropriate for the surrounding fire.

Section 6. Accidental Release Measures

Ventilate area of leak or spill. Cover spill with 1:1:1 mixture of Sodium Carbonate, clay cat litter and sand. Scoop into container and transport to fume hood. Add the mixture to cold water (about 10 mL water for each 1 mL of Formaldehyde solution). Slowly add household bleach (2.5 mL bleach for each 1 mL of Formaldehyde solution). Allow to stand for 20 minutes. Decant liquid to drain. Flush with water. Treat solid residue as normal refuse.

Section 7. Handling and Storage

Handling/Storage: As with all chemicals, wash hands thoroughly after handling. Avoid contact with eyes. Protect from freezing and physical damage. Use with adequate ventilation. Store at controlled room temperature, 15-30°C.
SAFETY STORAGE CODE: HEALTH

Section 8. Exposure Controls, Personal Protection

Engineering Controls: Use of a fume hood is recommended.

Respiratory Protection: If the exposure level is exceeded, wear a full facepiece respirator equipped with a formaldehyde cartridge.

Skin Protection: Gloves

Eye Protection: Safety glasses or goggles.

Permissible Exposure Levels (see also Section 2)

Component	CAS #	OSHA PEL	ACGIH TLV	Other Limits Recommended	Percent
Formaldehyde	50-00-0	0.75 ppm	C 0.3 mg/m^3		3-4
Methyl Alcohol	67-56-1	200 ppm	250 ppm		1-1.5
Sodium Phosphate Monobasic Monohydrate	10049-21-5	N/A	N/A		<1
Sodium Phosphate Dibasic	7558-79-4	N/A	N/A		<1
Water, Deionized	7732-18-5	N/A	N/A		Balance

Section 9. Physical and Chemical Properties

Boiling Point	approx. 100˚C	Specific Gravity (H2O = 1)	approx. 1.02
Vapor Pressure (mm Hg)	N/A	Melting Point	approx. 0˚C
Vapor Density (AIR = 1)		Evaporation rate (Butyl Acetate = 1)	
Solubility in Water	Infinite	Physical State	
Appearance and Odor	Clear, colorless/pungent odor	Other	pH: 7.0

Section 10. Stability and Reactivity

Chemical Stability: Stable under normal conditions of use and storage.

Incompatibility: Strong oxidizers, strong alkalies, acids, phenol, urea.

Hazardous Decomposition Products: May form Carbon Dioxide, Carbon Monoxide and Formaldehyde when heated to decomposition.

Hazardous Polymerization: Nonhazardous polymerization may occur, forming paraformaldehyde, a white solid.

Section 11. Toxological Information

LD_{50}, Oral, Rat: (Formaldehyde) 100 mg/kg; LD_{50}, Oral, Rat: (Sodium Phosphate Diabasic) 17,000 mg/kg; Details of toxic effects not reported other than lethal dose value.

Section 12. Ecological Information

Ecotoxicological Information: Formaldehyde is expected to be slightly toxic to aquatic life.

Chemical Fate Information: Formaldehyde is expected to readily biodegrade when released into water.

Section 13. Disposal Considerations

Whatever cannot be saved for recovery or recycling should be disposed of in a RCRA approved waste disposal facility. Dispose of in accordance with local, state, and federal regulations.

Section 14. Transport Information

GROUND SHIPMENTS: Not regulated

AIR SHIPMENTS: Aviation Regulated Liquid n.o.s. (formaldehyde), 9, UN3334

NOTE: It is ultimately the shippers responsibility to make hazard class determination based on their best information available.

Section 15. Regulatory Information

OSHA Status: This item meets the OSHA Hazard Communication Standard (29 CFR 1910.1200) definition of a hazardous material.

TSCA Status: All components of this solution are listed on the TSCA Inventory.

CERCLA Reportable Quantity: Formaldehyde, RQ 100 pounds.

SARA TITLE III:

Section 302 Extremely Hazardous Substances: Formaldehyde TPQ 500 pounds

Section 311/312 Hazardous Categories: No

Section 313 Toxic Chemicals: Formaldehyde, 0.1% De Minimus concentration

RCRA Status: No

California Proposition 65: No listed (Formaldehyde gas is listed)

Florida: Formaldehyde is listed on the state Toxic Substances List.

Pennsylvania: Formaldehyde is listed as an environmental and special hazard on the Hazardous Substances List.

Section 16. Other Information

NFPA Ratings: Health: 2 Flammability: 2 Reactivity: 0 Special Notice Key: None

HMIS® Ratings: Health: 4 Flammability: 2 Reactivity: 0 Protective Equipment: C (protective eyewear and gloves)

When handled properly by qualified personnel, the product described herein does not present a significant health or safety hazard. Alteration to its characteristics by concentration, evaporation, addition of other substances, or other means may present hazards not specifically addressed herein and which must be evaluated by the user. The information furnished herein is believed to be accurate and represents the best data currently available to us. No warranty, expressed or implied, is made and STATLAB MEDICAL PRODUCTS, INC. assumes no legal responsibility or liability whatsoever resulting from its use.

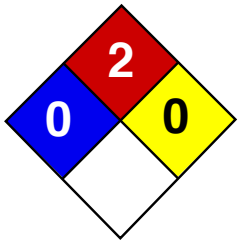

Health	0
Fire	2
Reactivity	0
Personal Protection	H

Material Safety Data Sheet
beta-Propiolactone MSDS

Section 1: Chemical Product and Company Identification

Product Name: beta-Propiolactone

Catalog Codes: SLP4486

CAS#: 57-57-8

RTECS: RQ7350000

TSCA: TSCA 8(b) inventory: beta-Propiolactone

CI#: Not available.

Synonym: 2-Oxetanone

Chemical Formula: C3H4O2

Contact Information:

Sciencelab.com, Inc.
14025 Smith Rd.
Houston, Texas 77396

US Sales: **1-800-901-7247**
International Sales: **1-281-441-4400**

Order Online: ScienceLab.com

CHEMTREC (24HR Emergency Telephone), call: 1-800-424-9300

International CHEMTREC, call: 1-703-527-3887

For non-emergency assistance, call: 1-281-441-4400

Section 2: Composition and Information on Ingredients

Composition:

Name	CAS #	% by Weight
{beta-}Propiolactone	57-57-8	100

Toxicological Data on Ingredients: beta-Propiolactone: VAPOR (LC50): Acute: 25 ppm 4 hour(s) [Rat].

Section 3: Hazards Identification

Potential Acute Health Effects:
Very hazardous in case of ingestion, of inhalation. Hazardous in case of skin contact (irritant), of eye contact (irritant). Slightly hazardous in case of skin contact (permeator). Corrosive to skin and eyes on contact. Liquid or spray mist may produce tissue damage particularly on mucous membranes of eyes, mouth and respiratory tract. Skin contact may produce burns. Inhalation of the spray mist may produce severe irritation of respiratory tract, characterized by coughing, choking, or shortness of breath. Severe over-exposure can result in death.

Potential Chronic Health Effects:
CARCINOGENIC EFFECTS: Classified + (PROVEN) by OSHA. Classified 2B (Possible for human.) by IARC. Classified A2 (Suspected for human.) by ACGIH, 2 (Reasonably anticipated.) by NTP. MUTAGENIC EFFECTS: Not available. TERATOGENIC EFFECTS: Not available. DEVELOPMENTAL TOXICITY: Not available. The substance is toxic to kidneys, lungs, liver, digestive system. Repeated or prolonged exposure to the substance can produce target organs damage. Repeated or prolonged contact with spray mist may produce chronic eye irritation and severe skin irritation. Repeated or prolonged exposure to spray mist may produce respiratory tract irritation leading to frequent attacks of bronchial infection. Repeated exposure to an highly toxic material may produce general deterioration of health by an accumulation in one or many human organs.

Section 4: First Aid Measures

Eye Contact:
Check for and remove any contact lenses. Immediately flush eyes with running water for at least 15 minutes, keeping eyelids open. Cold water may be used. Do not use an eye ointment. Seek medical attention.

Skin Contact:
If the chemical got onto the clothed portion of the body, remove the contaminated clothes as quickly as possible, protecting your own hands and body. Place the victim under a deluge shower. If the chemical got on the victim's exposed skin, such as the hands : Gently and thoroughly wash the contaminated skin with running water and non-abrasive soap. Be particularly careful to clean folds, crevices, creases and groin. Cold water may be used. If irritation persists, seek medical attention. Wash contaminated clothing before reusing.

Serious Skin Contact:
Wash with a disinfectant soap and cover the contaminated skin with an anti-bacterial cream. Seek immediate medical attention.

Inhalation: Allow the victim to rest in a well ventilated area. Seek immediate medical attention.

Serious Inhalation:
Evacuate the victim to a safe area as soon as possible. Loosen tight clothing such as a collar, tie, belt or waistband. If breathing is difficult, administer oxygen. If the victim is not breathing, perform mouth-to-mouth resuscitation. WARNING: It may be hazardous to the person providing aid to give mouth-to-mouth resuscitation when the inhaled material is toxic, infectious or corrosive. Seek immediate medical attention.

Ingestion:
Do not induce vomiting. Examine the lips and mouth to ascertain whether the tissues are damaged, a possible indication that the toxic material was ingested; the absence of such signs, however, is not conclusive. Loosen tight clothing such as a collar, tie, belt or waistband. If the victim is not breathing, perform mouth-to-mouth resuscitation. Seek immediate medical attention.

Serious Ingestion: Not available.

Section 5: Fire and Explosion Data

Flammability of the Product: Combustible.

Auto-Ignition Temperature: Not available.

Flash Points: OPEN CUP: 70°C (158°F).

Flammable Limits: LOWER: 2.9%

Products of Combustion: These products are carbon oxides (CO, CO2).

Fire Hazards in Presence of Various Substances: Flammable in presence of heat.

Explosion Hazards in Presence of Various Substances:
Risks of explosion of the product in presence of mechanical impact: Not available. Risks of explosion of the product in presence of static discharge: Not available.

Fire Fighting Media and Instructions:
SMALL FIRE: Use DRY chemical powder. LARGE FIRE: Use water spray, fog or foam. Do not use water jet.

Special Remarks on Fire Hazards: Not available.

Special Remarks on Explosion Hazards: Not available.

Section 6: Accidental Release Measures

Small Spill:
Dilute with water and mop up, or absorb with an inert dry material and place in an appropriate waste disposal container.

Large Spill:
Combustible material. Corrosive liquid. Keep away from heat. Keep away from sources of ignition. Stop leak if without risk. Absorb with DRY earth, sand or other non-combustible material. Do not get water inside container. Do not touch spilled material. Use water spray curtain to divert vapor drift. Prevent entry into sewers, basements or confined areas; dike if needed. Eliminate all ignition sources. Call for assistance on disposal. Be careful that the product is not present at a concentration level above TLV. Check TLV on the MSDS and with local authorities.

Section 7: Handling and Storage

Precautions:
Keep locked up Keep container dry. Keep away from heat. Keep away from sources of ignition. Ground all equipment containing material. Do not ingest. Do not breathe gas/fumes/ vapour/spray. Never add water to this product Wear suitable protective clothing In case of insufficient ventilation, wear suitable respiratory equipment If ingested, seek medical advice immediately and show the container or the label. Avoid contact with skin and eyes

Storage:
Flammable materials should be stored in a separate safety storage cabinet or room. Keep away from heat. Keep away from sources of ignition. Keep container tightly closed. Keep in a cool, well-ventilated place. Ground all equipment containing material. Keep container dry. Keep in a cool place.

Section 8: Exposure Controls/Personal Protection

Engineering Controls:
Provide exhaust ventilation or other engineering controls to keep the airborne concentrations of vapors below their respective threshold limit value. Ensure that eyewash stations and safety showers are proximal to the work-station location.

Personal Protection:
Splash goggles. Lab coat. Vapor respirator. Be sure to use an approved/certified respirator or equivalent. Gloves.

Personal Protection in Case of a Large Spill:
Splash goggles. Full suit. Vapor respirator. Boots. Gloves. A self contained breathing apparatus should be used to avoid inhalation of the product. Suggested protective clothing might not be sufficient; consult a specialist BEFORE handling this product.

Exposure Limits:
TWA: 0.5 (ppm) TWA: 1.5 (mg/m3) Consult local authorities for acceptable exposure limits.

Section 9: Physical and Chemical Properties

Physical state and appearance: Liquid.

Odor: Pungent.

Taste: Not available.

Molecular Weight: 72.06 g/mole

Color: Colorless.

pH (1% soln/water): Not available.

Boiling Point: Decomposes. (155°C or 311°F)

Melting Point: -33.4°C (-28.1°F)

Critical Temperature: Not available.

Specific Gravity: 1.48 (Water = 1)

Vapor Pressure: 3.4 mm of Hg (@ 20°C)

Vapor Density: 2.5 (Air = 1)

Volatility: Not available.

Odor Threshold: Not available.

Water/Oil Dist. Coeff.: Not available.

Ionicity (in Water): Not available.

Dispersion Properties: See solubility in water.

Solubility: Soluble in cold water.

Section 10: Stability and Reactivity Data

Stability: The product is stable.

Instability Temperature: Not available.

Conditions of Instability: Not available.

Incompatibility with various substances: Not available.

Corrosivity: Non-corrosive in presence of glass.

Special Remarks on Reactivity: Not available.

Special Remarks on Corrosivity: Not available.

Polymerization: Yes.

Section 11: Toxicological Information

Routes of Entry: Eye contact. Inhalation. Ingestion.

Toxicity to Animals:
WARNING: THE LC50 VALUES HEREUNDER ARE ESTIMATED ON THE BASIS OF A 4-HOUR EXPOSURE. Acute toxicity of the vapor (LC50): 25 ppm 4 hour(s) [Rat].

Chronic Effects on Humans:
CARCINOGENIC EFFECTS: Classified + (PROVEN) by OSHA. Classified 2B (Possible for human.) by IARC. Classified A2 (Suspected for human.) by ACGIH, 2 (Reasonably anticipated.) by NTP. The substance is toxic to kidneys, lungs, liver, digestive system.

Other Toxic Effects on Humans:
Very hazardous in case of ingestion, of inhalation. Hazardous in case of skin contact (irritant). Slightly hazardous in case of skin contact (permeator).

Special Remarks on Toxicity to Animals: Not available.

Special Remarks on Chronic Effects on Humans: Not available.

Special Remarks on other Toxic Effects on Humans: Not available.

Section 12: Ecological Information

Ecotoxicity: Not available.

BOD5 and COD: Not available.

Products of Biodegradation:
Possibly hazardous short term degradation products are not likely. However, long term degradation products may arise.

Toxicity of the Products of Biodegradation: The products of degradation are more toxic.

Special Remarks on the Products of Biodegradation: Not available.

Section 13: Disposal Considerations

Waste Disposal:

Section 14: Transport Information

DOT Classification: CLASS 6.1: Poisonous material.

Identification: : Toxic liquids n.o.s. : UN2810 PG: Not available.

Special Provisions for Transport: Not available.

Section 15: Other Regulatory Information

Federal and State Regulations:
California prop. 65: This product contains the following ingredients for which the State of California has found to cause cancer, birth defects or other reproductive harm, which would require a warning under the statute: beta-Propiolactone California prop. 65: This product contains the following ingredients for which the State of California has found to cause cancer which would require a warning under the statute: beta-Propiolactone Pennsylvania RTK: beta-Propiolactone Florida: beta-Propiolactone Minnesota: beta-Propiolactone Massachusetts RTK: beta-Propiolactone New Jersey: beta-Propiolactone TSCA 8(b) inventory: beta-Propiolactone SARA 313 toxic chemical notification and release reporting: beta-Propiolactone CERCLA: Hazardous substances.: beta-Propiolactone

Other Regulations: OSHA: Hazardous by definition of Hazard Communication Standard (29 CFR 1910.1200).

Other Classifications:

WHMIS (Canada):
CLASS B-3: Combustible liquid with a flash point between 37.8°C (100°F) and 93.3°C (200°F). CLASS D-1A: Material causing immediate and serious toxic effects (VERY TOXIC). CLASS D-2A: Material causing other toxic effects (VERY TOXIC). CLASS E: Corrosive liquid.

DSCL (EEC):
R26- Very toxic by inhalation. R36/38- Irritating to eyes and skin. R45- May cause cancer.

HMIS (U.S.A.):

Health Hazard: 0

Fire Hazard: 2

Reactivity: 0

Personal Protection: h

National Fire Protection Association (U.S.A.):

Health: 0

Flammability: 2

Reactivity: 0

Specific hazard:

Protective Equipment:
Gloves. Lab coat. Vapor respirator. Be sure to use an approved/certified respirator or equivalent. Wear appropriate respirator when ventilation is inadequate. Splash goggles.

Section 16: Other Information

References: Not available.

Other Special Considerations: Not available.

Created: 10/09/2005 06:12 PM

Last Updated: 06/09/2012 12:00 PM

The information above is believed to be accurate and represents the best information currently available to us. However, we make no warranty of merchantability or any other warranty, express or implied, with respect to such information, and we assume no liability resulting from its use. Users should make their own investigations to determine the suitability of the information for their particular purposes. In no event shall ScienceLab.com be liable for any claims, losses, or damages of any third party or for lost profits or any special, indirect, incidental, consequential or exemplary damages, howsoever arising, even if ScienceLab.com has been advised of the possibility of such damages.

Material Safety Data Sheet

Version 5.2
Revision Date 11/05/2012
Print Date 02/11/2013

1. PRODUCT AND COMPANY IDENTIFICATION

Product name	:	Sodium pyruvate
Product Number	:	80443
Brand	:	Sigma-Aldrich
Supplier	:	Sigma-Aldrich 3050 Spruce Street SAINT LOUIS MO 63103 USA
Telephone	:	+1 800-325-5832
Fax	:	+1 800-325-5052
Emergency Phone # (For both supplier and manufacturer)	:	(314) 776-6555
Preparation Information	:	Sigma-Aldrich Corporation Product Safety - Americas Region 1-800-521-8956

2. HAZARDS IDENTIFICATION

Emergency Overview

OSHA Hazards
No known OSHA hazards

Not a dangerous substance or mixture according to the Globally Harmonised System (GHS).

HMIS Classification

Health hazard:	0
Flammability:	0
Physical hazards:	0

NFPA Rating

Health hazard:	0
Fire:	0
Reactivity Hazard:	0

Potential Health Effects

Inhalation	May be harmful if inhaled. May cause respiratory tract irritation.
Skin	May be harmful if absorbed through skin. May cause skin irritation.
Eyes	May cause eye irritation.
Ingestion	May be harmful if swallowed.

3. COMPOSITION/INFORMATION ON INGREDIENTS

Formula	:	$C_3H_3NaO_3$
Molecular Weight	:	110.04 g/mol

No ingredients are hazardous according to OSHA criteria.

4. FIRST AID MEASURES

If inhaled
If breathed in, move person into fresh air. If not breathing, give artificial respiration.

In case of skin contact
Wash off with soap and plenty of water.

In case of eye contact
Flush eyes with water as a precaution.

If swallowed
Never give anything by mouth to an unconscious person. Rinse mouth with water.

5. FIREFIGHTING MEASURES

Conditions of flammability
Not flammable or combustible.

Suitable extinguishing media
Use water spray, alcohol-resistant foam, dry chemical or carbon dioxide.

Special protective equipment for firefighters
Wear self contained breathing apparatus for fire fighting if necessary.

Hazardous combustion products
Hazardous decomposition products formed under fire conditions. - Carbon oxides, Sodium oxides

6. ACCIDENTAL RELEASE MEASURES

Personal precautions
Avoid dust formation. Avoid breathing vapors, mist or gas.

Environmental precautions
Do not let product enter drains.

Methods and materials for containment and cleaning up
Sweep up and shovel. Keep in suitable, closed containers for disposal.

7. HANDLING AND STORAGE

Precautions for safe handling
Provide appropriate exhaust ventilation at places where dust is formed.

Conditions for safe storage
Keep container tightly closed in a dry and well-ventilated place.

Keep in a dry place.

8. EXPOSURE CONTROLS/PERSONAL PROTECTION

Contains no substances with occupational exposure limit values.

Personal protective equipment

Respiratory protection
Respiratory protection is not required. Where protection from nuisance levels of dusts are desired, use type N95 (US) or type P1 (EN 143) dust masks. Use respirators and components tested and approved under appropriate government standards such as NIOSH (US) or CEN (EU).

Hand protection
Handle with gloves. Gloves must be inspected prior to use. Use proper glove removal technique (without touching glove's outer surface) to avoid skin contact with this product. Dispose of contaminated gloves after use in accordance with applicable laws and good laboratory practices. Wash and dry hands.

Eye protection
Use equipment for eye protection tested and approved under appropriate government standards such as NIOSH (US) or EN 166(EU).

Skin and body protection
Choose body protection in relation to its type, to the concentration and amount of dangerous substances, and to the specific work-place., The type of protective equipment must be selected according to the concentration and amount of the dangerous substance at the specific workplace.

Hygiene measures
General industrial hygiene practice.

9. PHYSICAL AND CHEMICAL PROPERTIES

Appearance

Form	powder
Colour	white

Safety data

pH	7
Melting point/freezing point	Melting point/range: > 300 °C (> 572 °F) - lit.
Boiling point	no data available
Flash point	no data available
Ignition temperature	no data available
Autoignition temperature	no data available
Lower explosion limit	no data available
Upper explosion limit	no data available
Vapour pressure	no data available
Density	no data available
Water solubility	soluble
Partition coefficient: n-octanol/water	no data available
Relative vapour density	no data available
Odour	no data available
Odour Threshold	no data available
Evaporation rate	no data available

10. STABILITY AND REACTIVITY

Chemical stability
Stable under recommended storage conditions.

Possibility of hazardous reactions
no data available

Conditions to avoid
no data available

Materials to avoid
Strong oxidizing agents

Hazardous decomposition products
Hazardous decomposition products formed under fire conditions. - Carbon oxides, Sodium oxides
Other decomposition products - no data available

11. TOXICOLOGICAL INFORMATION

Acute toxicity

Oral LD50
no data available

Inhalation LC50

no data available

Dermal LD50
no data available

Other information on acute toxicity
no data available

Skin corrosion/irritation
no data available

Serious eye damage/eye irritation
no data available

Respiratory or skin sensitization
no data available

Germ cell mutagenicity
no data available

Carcinogenicity

IARC:	No component of this product present at levels greater than or equal to 0.1% is identified as probable, possible or confirmed human carcinogen by IARC.
ACGIH:	No component of this product present at levels greater than or equal to 0.1% is identified as a carcinogen or potential carcinogen by ACGIH.
NTP:	No component of this product present at levels greater than or equal to 0.1% is identified as a known or anticipated carcinogen by NTP.
OSHA:	No component of this product present at levels greater than or equal to 0.1% is identified as a carcinogen or potential carcinogen by OSHA.

Reproductive toxicity

no data available

Teratogenicity

no data available

Specific target organ toxicity - single exposure (Globally Harmonized System)
no data available

Specific target organ toxicity - repeated exposure (Globally Harmonized System)
no data available

Aspiration hazard
no data available

Potential health effects

Inhalation	May be harmful if inhaled. May cause respiratory tract irritation.
Ingestion	May be harmful if swallowed.
Skin	May be harmful if absorbed through skin. May cause skin irritation.
Eyes	May cause eye irritation.

Signs and Symptoms of Exposure
To the best of our knowledge, the chemical, physical, and toxicological properties have not been thoroughly investigated.

Synergistic effects
no data available

Additional Information
RTECS: Not available

12. ECOLOGICAL INFORMATION

Toxicity

no data available

Persistence and degradability
no data available

Bioaccumulative potential
no data available

Mobility in soil
no data available

PBT and vPvB assessment
no data available

Other adverse effects

no data available

13. DISPOSAL CONSIDERATIONS

Product
Offer surplus and non-recyclable solutions to a licensed disposal company.

Contaminated packaging
Dispose of as unused product.

14. TRANSPORT INFORMATION

DOT (US)
Not dangerous goods

IMDG
Not dangerous goods

IATA
Not dangerous goods

15. REGULATORY INFORMATION

OSHA Hazards
No known OSHA hazards

SARA 302 Components
SARA 302: No chemicals in this material are subject to the reporting requirements of SARA Title III, Section 302.

SARA 313 Components
SARA 313: This material does not contain any chemical components with known CAS numbers that exceed the threshold (De Minimis) reporting levels established by SARA Title III, Section 313.

SARA 311/312 Hazards
No SARA Hazards

Massachusetts Right To Know Components
No components are subject to the Massachusetts Right to Know Act.

Pennsylvania Right To Know Components

	CAS-No.	Revision Date
Sodium pyruvate	113-24-6	

New Jersey Right To Know Components

	CAS-No.	Revision Date
Sodium pyruvate	113-24-6	

California Prop. 65 Components
This product does not contain any chemicals known to State of California to cause cancer, birth defects, or any other reproductive harm.

16. OTHER INFORMATION

Further information

Copyright 2012 Sigma-Aldrich Co. LLC. License granted to make unlimited paper copies for internal use only.
The above information is believed to be correct but does not purport to be all inclusive and shall be used only as a guide. The information in this document is based on the present state of our knowledge and is applicable to the product with regard to appropriate safety precautions. It does not represent any guarantee of the properties of the product. Sigma-Aldrich Corporation and its Affiliates shall not be held liable for any damage resulting from handling or from contact with the above product. See www.sigma-aldrich.com and/or the reverse side of invoice or packing slip for additional terms and conditions of sale.

Material Safety Data Sheet

Version 4.3
Revision Date 12/31/2012
Print Date 02/11/2013

1. PRODUCT AND COMPANY IDENTIFICATION

Product name	:	Sodium bicarbonate
Product Number	:	S8875
Brand	:	Sigma-Aldrich
Supplier	:	Sigma-Aldrich 3050 Spruce Street SAINT LOUIS MO 63103 USA
Telephone	:	+1 800-325-5832
Fax	:	+1 800-325-5052
Emergency Phone # (For both supplier and manufacturer)	:	(314) 776-6555
Preparation Information	:	Sigma-Aldrich Corporation Product Safety - Americas Region 1-800-521-8956

2. HAZARDS IDENTIFICATION

Emergency Overview

OSHA Hazards
No known OSHA hazards

Not a dangerous substance or mixture according to the Globally Harmonised System (GHS).

HMIS Classification

Health hazard: 0
Flammability: 0
Physical hazards: 0

NFPA Rating

Health hazard: 0
Fire: 0
Reactivity Hazard: 0

Potential Health Effects

Inhalation	May be harmful if inhaled. May cause respiratory tract irritation.
Skin	May be harmful if absorbed through skin. May cause skin irritation.
Eyes	May cause eye irritation.
Ingestion	May be harmful if swallowed.

3. COMPOSITION/INFORMATION ON INGREDIENTS

Synonyms	:	Sodium hydrogen carbonate
Formula	:	$CHNaO_3$
Molecular Weight	:	84.01 g/mol

No ingredients are hazardous according to OHSA criteria.

4. FIRST AID MEASURES

If inhaled
If breathed in, move person into fresh air. If not breathing, give artificial respiration.

In case of skin contact
Wash off with soap and plenty of water.

In case of eye contact
Flush eyes with water as a precaution.

If swallowed
Never give anything by mouth to an unconscious person. Rinse mouth with water.

5. FIREFIGHTING MEASURES

Conditions of flammability
Not flammable or combustible.

Suitable extinguishing media
Use water spray, alcohol-resistant foam, dry chemical or carbon dioxide.

Special protective equipment for firefighters
Wear self contained breathing apparatus for fire fighting if necessary.

Hazardous combustion products
Hazardous decomposition products formed under fire conditions. - Carbon oxides, Sodium oxides

6. ACCIDENTAL RELEASE MEASURES

Personal precautions
Avoid dust formation. Avoid breathing vapors, mist or gas.

Environmental precautions
Do not let product enter drains.

Methods and materials for containment and cleaning up
Sweep up and shovel. Keep in suitable, closed containers for disposal.

7. HANDLING AND STORAGE

Precautions for safe handling
Provide appropriate exhaust ventilation at places where dust is formed.

Conditions for safe storage
Keep container tightly closed in a dry and well-ventilated place.

8. EXPOSURE CONTROLS/PERSONAL PROTECTION

Contains no substances with occupational exposure limit values.

Personal protective equipment

Respiratory protection
Respiratory protection is not required. Where protection from nuisance levels of dusts are desired, use type N95 (US) or type P1 (EN 143) dust masks. Use respirators and components tested and approved under appropriate government standards such as NIOSH (US) or CEN (EU).

Hand protection
Handle with gloves. Gloves must be inspected prior to use. Use proper glove removal technique (without touching glove's outer surface) to avoid skin contact with this product. Dispose of contaminated gloves after use in accordance with applicable laws and good laboratory practices. Wash and dry hands.

Full contact
Material: Nitrile rubber
Minimum layer thickness: 0.11 mm
Break through time: 480 min
Material tested:Dermatril® (KCL 740 / Aldrich Z677272, Size M)

Splash protection
Material: Nitrile rubber

Minimum layer thickness: 0.11 mm
Break through time: 480 min
Material tested:Dermatril® (KCL 740 / Aldrich Z677272, Size M)

data source: KCL GmbH, D-36124 Eichenzell, phone +49 (0)6659 87300, e-mail sales@kcl.de, test method: EN374
If used in solution, or mixed with other substances, and under conditions which differ from EN 374, contact the supplier of the CE approved gloves. This recommendation is advisory only and must be evaluated by an Industrial Hygienist familiar with the specific situation of anticipated use by our customers. It should not be construed as offering an approval for any specific use scenario.

Eye protection
Use equipment for eye protection tested and approved under appropriate government standards such as NIOSH (US) or EN 166(EU).

Skin and body protection
Choose body protection in relation to its type, to the concentration and amount of dangerous substances, and to the specific work-place., The type of protective equipment must be selected according to the concentration and amount of the dangerous substance at the specific workplace.

Hygiene measures
General industrial hygiene practice.

9. PHYSICAL AND CHEMICAL PROPERTIES

Appearance

Form	crystalline
Colour	no data available

Safety data

pH	no data available
Melting point/freezing point	300 °C (572 °F)
Boiling point	no data available
Flash point	no data available
Ignition temperature	no data available
Auto-ignition temperature	no data available
Lower explosion limit	no data available
Upper explosion limit	no data available
Vapour pressure	no data available
Density	2.160 g/cm3
Water solubility	50 g/l
Partition coefficient: n-octanol/water	no data available
Relative vapor density	no data available
Odour	no data available
Odour Threshold	no data available
Evaporation rate	no data available

10. STABILITY AND REACTIVITY

Chemical stability
Stable under recommended storage conditions.

Possibility of hazardous reactions
no data available

Conditions to avoid
Exposure to moisture.

Materials to avoid
Strong acids, Strong oxidizing agents

Hazardous decomposition products
Hazardous decomposition products formed under fire conditions. - Carbon oxides, Sodium oxides
Other decomposition products - no data available

11. TOXICOLOGICAL INFORMATION

Acute toxicity

Oral LD50
LD50 Oral - rat - 4,220 mg/kg

Inhalation LC50
no data available

Dermal LD50
no data available

Other information on acute toxicity
no data available

Skin corrosion/irritation
Skin - Human - Mild skin irritation - 3 d

Serious eye damage/eye irritation
Eyes - rabbit - Mild eye irritation - 30 s

Respiratory or skin sensitization
no data available

Germ cell mutagenicity
no data available

Carcinogenicity

IARC:	No component of this product present at levels greater than or equal to 0.1% is identified as probable, possible or confirmed human carcinogen by IARC.
ACGIH:	No component of this product present at levels greater than or equal to 0.1% is identified as a carcinogen or potential carcinogen by ACGIH.
NTP:	No component of this product present at levels greater than or equal to 0.1% is identified as a known or anticipated carcinogen by NTP.
OSHA:	No component of this product present at levels greater than or equal to 0.1% is identified as a carcinogen or potential carcinogen by OSHA.

Reproductive toxicity

no data available

Teratogenicity

no data available

Specific target organ toxicity - single exposure (Globally Harmonized System)
no data available

Specific target organ toxicity - repeated exposure (Globally Harmonized System)
no data available

Aspiration hazard
no data available

Potential health effects

Inhalation	May be harmful if inhaled. May cause respiratory tract irritation.
Ingestion	May be harmful if swallowed.
Skin	May be harmful if absorbed through skin. May cause skin irritation.
Eyes	May cause eye irritation.

Signs and Symptoms of Exposure
Exposure to large amounts can cause:, Gastrointestinal disturbance, Heavy or prolonged skin exposure may result in the absorption of harmful amounts of material.

Synergistic effects
no data available

Additional Information
RTECS: VZ0950000

12. ECOLOGICAL INFORMATION

Toxicity

no data available

Persistence and degradability
no data available

Bioaccumulative potential
no data available

Mobility in soil
no data available

PBT and vPvB assessment
no data available

Other adverse effects

no data available

13. DISPOSAL CONSIDERATIONS

Product
Offer surplus and non-recyclable solutions to a licensed disposal company.

Contaminated packaging
Dispose of as unused product.

14. TRANSPORT INFORMATION

DOT (US)
Not dangerous goods

IMDG
Not dangerous goods

IATA
Not dangerous goods

15. REGULATORY INFORMATION

OSHA Hazards
No known OSHA hazards

SARA 302 Components
SARA 302: No chemicals in this material are subject to the reporting requirements of SARA Title III, Section 302.

SARA 313 Components
SARA 313: This material does not contain any chemical components with known CAS numbers that exceed the threshold (De Minimis) reporting levels established by SARA Title III, Section 313.

SARA 311/312 Hazards
No SARA Hazards

Massachusetts Right To Know Components
No components are subject to the Massachusetts Right to Know Act.

Pennsylvania Right To Know Components

	CAS-No.	Revision Date
Sodium hydrogencarbonate	144-55-8	

New Jersey Right To Know Components

	CAS-No.	Revision Date
Sodium hydrogencarbonate	144-55-8	

California Prop. 65 Components
This product does not contain any chemicals known to State of California to cause cancer, birth defects, or any other reproductive harm.

16. OTHER INFORMATION

Further information
Copyright 2012 Sigma-Aldrich Co. LLC. License granted to make unlimited paper copies for internal use only.
The above information is believed to be correct but does not purport to be all inclusive and shall be used only as a guide. The information in this document is based on the present state of our knowledge and is applicable to the product with regard to appropriate safety precautions. It does not represent any guarantee of the properties of the product. Sigma-Aldrich Corporation and its Affiliates shall not be held liable for any damage resulting from handling or from contact with the above product. See www.sigma-aldrich.com and/or the reverse side of invoice or packing slip for additional terms and conditions of sale.

Material Safety Data Sheet

Version 5.1
Revision Date 01/20/2012
Print Date 04/07/2013

1. PRODUCT AND COMPANY IDENTIFICATION

Product name	:	EX-CELL(TM) 420 w/L-glutamine
Product Number	:	24420C
Brand	:	Sigma
Supplier	:	Sigma-Aldrich 3050 Spruce Street SAINT LOUIS MO 63103 USA
Telephone	:	+1 800-325-5832
Fax	:	+1 800-325-5052
Emergency Phone # (For both supplier and manufacturer)	:	(314) 776-6555
Preparation Information	:	Sigma-Aldrich Corporation Product Safety - Americas Region 1-800-521-8956

2. HAZARDS IDENTIFICATION

Emergency Overview

OSHA Hazards
No known OSHA hazards

Not a dangerous substance or mixture according to the Globally Harmonised System (GHS).

HMIS Classification

Health hazard:	0
Flammability:	0
Physical hazards:	0

NFPA Rating

Health hazard:	0
Fire:	0
Reactivity Hazard:	0

Potential Health Effects

Inhalation	May be harmful if inhaled. May cause respiratory tract irritation.
Skin	May be harmful if absorbed through skin. May cause skin irritation.
Eyes	May cause eye irritation.
Ingestion	May be harmful if swallowed.

3. COMPOSITION/INFORMATION ON INGREDIENTS

No ingredients are hazardous according to OHSA criteria.

4. FIRST AID MEASURES

If inhaled
If breathed in, move person into fresh air. If not breathing, give artificial respiration.

In case of skin contact
Wash off with soap and plenty of water.

In case of eye contact
Flush eyes with water as a precaution.

If swallowed
Never give anything by mouth to an unconscious person. Rinse mouth with water.

5. FIREFIGHTING MEASURES

Conditions of flammability
Not flammable or combustible.

Suitable extinguishing media
Use water spray, alcohol-resistant foam, dry chemical or carbon dioxide.

Special protective equipment for firefighters
Wear self contained breathing apparatus for fire fighting if necessary.

Hazardous combustion products

6. ACCIDENTAL RELEASE MEASURES

Personal precautions
Avoid breathing vapors, mist or gas.

Environmental precautions
Do not let product enter drains.

Methods and materials for containment and cleaning up
Keep in suitable, closed containers for disposal.

7. HANDLING AND STORAGE

Conditions for safe storage
Keep container tightly closed in a dry and well-ventilated place. Containers which are opened must be carefully resealed and kept upright to prevent leakage.

8. EXPOSURE CONTROLS/PERSONAL PROTECTION

Contains no substances with occupational exposure limit values.

Personal protective equipment

Respiratory protection
Respiratory protection not required. For nuisance exposures use type OV/AG (US) or type ABEK (EU EN 14387) respirator cartridges. Use respirators and components tested and approved under appropriate government standards such as NIOSH (US) or CEN (EU).

Hand protection
Handle with gloves. Gloves must be inspected prior to use. Use proper glove removal technique (without touching glove's outer surface) to avoid skin contact with this product. Dispose of contaminated gloves after use in accordance with applicable laws and good laboratory practices. Wash and dry hands.

Eye protection
Use equipment for eye protection tested and approved under appropriate government standards such as NIOSH (US) or EN 166(EU).

Skin and body protection
impervious clothing, The type of protective equipment must be selected according to the concentration and amount of the dangerous substance at the specific workplace.

Hygiene measures
General industrial hygiene practice.

9. PHYSICAL AND CHEMICAL PROPERTIES

Appearance

Form	liquid

Colour	no data available

Safety data

pH	no data available
Melting point/freezing point	no data available
Boiling point	no data available
Flash point	no data available
Ignition temperature	no data available
Autoignition temperature	no data available
Lower explosion limit	no data available
Upper explosion limit	no data available
Vapour pressure	no data available
Density	no data available
Water solubility	no data available
Partition coefficient: n-octanol/water	no data available
Relative vapour density	no data available
Odour	no data available
Odour Threshold	no data available
Evaporation rate	no data available

10. STABILITY AND REACTIVITY

Chemical stability
Stable under recommended storage conditions.

Possibility of hazardous reactions
no data available

Conditions to avoid
no data available

Materials to avoid
no data available

Hazardous decomposition products
Other decomposition products - no data available

11. TOXICOLOGICAL INFORMATION

Acute toxicity

Oral LD50
no data available

Inhalation LC50
no data available

Dermal LD50
no data available

Other information on acute toxicity
no data available

Skin corrosion/irritation
no data available

Serious eye damage/eye irritation
Eyes: no data available

Respiratory or skin sensitization
no data available

Germ cell mutagenicity
no data available

Carcinogenicity

IARC:	No component of this product present at levels greater than or equal to 0.1% is identified as probable, possible or confirmed human carcinogen by IARC.
ACGIH:	No component of this product present at levels greater than or equal to 0.1% is identified as a carcinogen or potential carcinogen by ACGIH.
NTP:	No component of this product present at levels greater than or equal to 0.1% is identified as a known or anticipated carcinogen by NTP.
OSHA:	No component of this product present at levels greater than or equal to 0.1% is identified as a carcinogen or potential carcinogen by OSHA.

Reproductive toxicity

no data available

Teratogenicity

no data available

Specific target organ toxicity - single exposure (Globally Harmonized System)
no data available

Specific target organ toxicity - repeated exposure (Globally Harmonized System)
no data available

Aspiration hazard
no data available

Potential health effects

Inhalation	May be harmful if inhaled. May cause respiratory tract irritation.
Ingestion	May be harmful if swallowed.
Skin	May be harmful if absorbed through skin. May cause skin irritation.
Eyes	May cause eye irritation.

Signs and Symptoms of Exposure
To the best of our knowledge, the chemical, physical, and toxicological properties have not been thoroughly investigated.

Synergistic effects
no data available

Additional Information
RTECS: Not available

12. ECOLOGICAL INFORMATION

Toxicity

no data available

Persistence and degradability
no data available

Bioaccumulative potential
no data available

Mobility in soil

no data available

PBT and vPvB assessment
no data available

Other adverse effects

no data available

13. DISPOSAL CONSIDERATIONS

Product
Offer surplus and non-recyclable solutions to a licensed disposal company.

Contaminated packaging
Dispose of as unused product.

14. TRANSPORT INFORMATION

DOT (US)
Not dangerous goods

IMDG
Not dangerous goods

IATA
Not dangerous goods

15. REGULATORY INFORMATION

OSHA Hazards
No known OSHA hazards

SARA 302 Components
SARA 302: No chemicals in this material are subject to the reporting requirements of SARA Title III, Section 302.

SARA 313 Components
SARA 313: This material does not contain any chemical components with known CAS numbers that exceed the threshold (De Minimis) reporting levels established by SARA Title III, Section 313.

SARA 311/312 Hazards
No SARA Hazards

Massachusetts Right To Know Components
No components are subject to the Massachusetts Right to Know Act.

Pennsylvania Right To Know Components

	CAS-No.	Revision Date
EX-CELL(TM) 420 w/L-glutamine	-	

New Jersey Right To Know Components

	CAS-No.	Revision Date
EX-CELL(TM) 420 w/L-glutamine	-	

California Prop. 65 Components
This product does not contain any chemicals known to State of California to cause cancer, birth defects, or any other reproductive harm.

16. OTHER INFORMATION

Further information
Copyright 2012 Sigma-Aldrich Co. LLC. License granted to make unlimited paper copies for internal use only.
The above information is believed to be correct but does not purport to be all inclusive and shall be used only as a guide. The information in this document is based on the present state of our knowledge and is applicable to the product with regard to appropriate safety precautions. It does not represent any guarantee of the properties of the product. Sigma-Aldrich Corporation and its Affiliates shall not be held liable for any damage resulting from handling or from contact with the above product. See www.sigma-aldrich.com and/or the reverse side of invoice or packing slip for additional terms and conditions of sale.

sartorius stedim biotech

Biosafe®
Single-Use Aseptic Transfer Systems

turning science into solutions

A Complete Range...

...of Bags for a Variety of Applications
The Biosafe range of bags is designed to best fit your requirements for aseptic transfer of stoppers, pumps, tools, QC test devices, fluids and powders into critical processing areas.

Autoclavable Biosafe Bags
- Open autoclavable Biosafe bags are filled on-site prior to autoclave sterilization and aseptic transfer.
- Prefilled autoclavable Biosafe bags are delivered ready-to-sterilize by your component supplier.
- Entry of stoppers, tools, pump into isolators, RABS and cleanrooms.

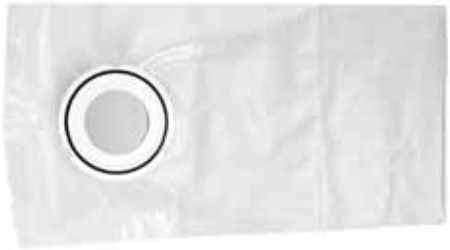

Gamma Irradiatable Biosafe Bags
- Prefilled Biosafe bags are delivered gamma sterilized by your component supplier for the entry of stoppers (prefillable syringe, vial, carpule), QC test devices and any other gamma sterilizable parts.
- Gamma irradiated Biosafe bags are used for the removal of waste, tools, pumps and QC test devices from critical areas.
- Rapid Aseptic Fluid Transfer (RAFT) System is a sterile system designed for the aseptic transfer of liquids.

Gamma Irradiated Double-Connector Biosafe Bags
Specifically designed for the two-step transfer of components from autoclave (using the Biosafe Biosteam Port) into an isolator.

Dummy Service Connector
For sterilization and maintenance of the Biosafe Ports.

The Biosafe® Port

The Biosafe range of aseptic transfer ports offers reliable and easy-to-use solutions that meet your specific needs and applications. The unique design of the Biosafe system enables the secure transfer of components, fluids and powders while maintaining the integrity of the critical area.

Biosafe Three-Lever Port
For the aseptic transfer of fluids into cleanrooms.

Biosafe Monolever Port
For the aseptic transfer of components and fluids into isolators, RABS and cleanrooms.

Biosafe Biosteam® Port
- When installed on autoclaves, the steamable version of the Biosafe Port allows reliable aseptic discharging of bulk stoppers from the autoclave into double-connector gamma irradiated bags prior to transfer into an isolator.
- Allows the contained addition of powders into formulation vessels.

The Highest Quality Assurance

- Manufactured in ISO 9001 and ISO 13485 certified facilities
- 100% quality control on Biosafe Ports – Dimensional and leak testing
- 100% quality control on Biosafe bag connector assemblies
- Biosafe bags assembled in Class C (ISO 7) cleanrooms

Biosafe Automatic Port
Automated aseptic transfer of components into isolators and RABS.

Achieving Safe, Easy-to-Use & Reliable Aseptic Transfer

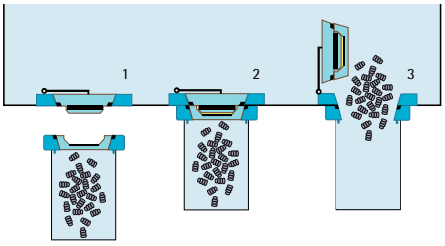

Biosafe Aseptic Transfer Systems
1. Biosafe bag approach
2. Magnetic docking
3. Transfer

Enhanced Sterility Assurance in Aseptic Processing
- Offers a contained and single-use technology for safer aseptic transfer.
- Limits the number and complexity of personnel interventions in the aseptic processing area.
- Offers a completely closed aseptic process.

Safer Processing of Potent Drugs
- Maintains the barrier integrity of RABS and isolators and security of operators.

Ease-of-Use
- The magnet on the port allows easy centering and secure docking of the Biosafe bag.

Process Safety
- Mechanical interlock securities prevent door opening when a bag is not connected or from disconnecting a bag if the Biosafe Port is not closed.
- Automatic inter-door vacuum integrity test of Biosafe Port and connector.

Versatile Technoloy
- The range of Biosafe systems is designed to best fit a variety of applications while ensuring a high level of containment.
- Biosafe is a unique technology for the aseptic transfer of components, fluids and powders.

Simplified Maintenance and Sterilization
- When connected to the Biosafe Port, the dummy service connector facilitates the sterilization of the critical area, the inner side of the Biosafe Port and maintenance operations.

Proven Containment
- Biosafe Ports and connectors are 100% leak tested during production.
- Packaging Biosafe bags under vacuum can offer an additional guaranty of integrity.

Practical and Economical Benefits
- The Biosafe bags eliminate cleaning and sterilization required for traditional transfer containers.
- The RAFT System simplifies facility layout and reduces higher classification cleanroom area by keeping large volume support solutions outside the cleanroom.

In | Out Aseptic Transfer into	Clean-room	Isolator	RABS	Auto-clave	Formulation vessel
Biosafe 110 Three-Lever TTI Port	•				
Biosafe 110 Monolever Port	•	•	•*		
Biosafe 110 Automatic Port		•	•*		
Biosafe 110 Biosteam Port				•	•

* The Biosafe Port with outside opening is the best choise to prevent air turbulence in RABS

Services to Filling Line in Aseptic Processing

Applied to filling lines, the Biosafe technology is the answer to a variety af aseptic transfer applications around the filling process.

Removal of waste

Removal of Petri dishes

Entry of sterile fluid

The RAFT System is used for the aseptic transfer of bulk final product onto the filling line within an isolator, RABS or cleanroom.

The inner sleeve of Biosafe bags guides the components during transfer.

Bulk autoclave discharging with the Biosafe Biosteam Port on the autoclave.

Entry of stoppers or caps

Entry of stoppers or caps

Entry of QC test devices

Entry of tools

Upstream & Downstream Processing

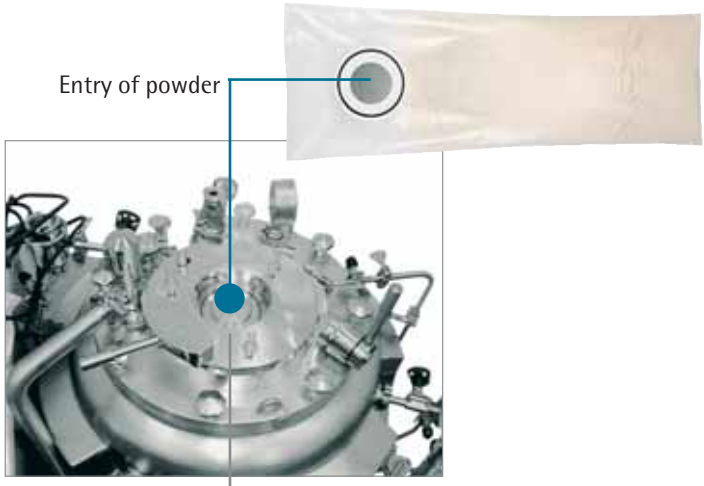

Entry of powder

The Biosafe Biosteam Port can be cleaned and sterilized in-place along with the formulation vessel. The Biosafe bags are used for the contained transfer of powders for media and buffer preparation.

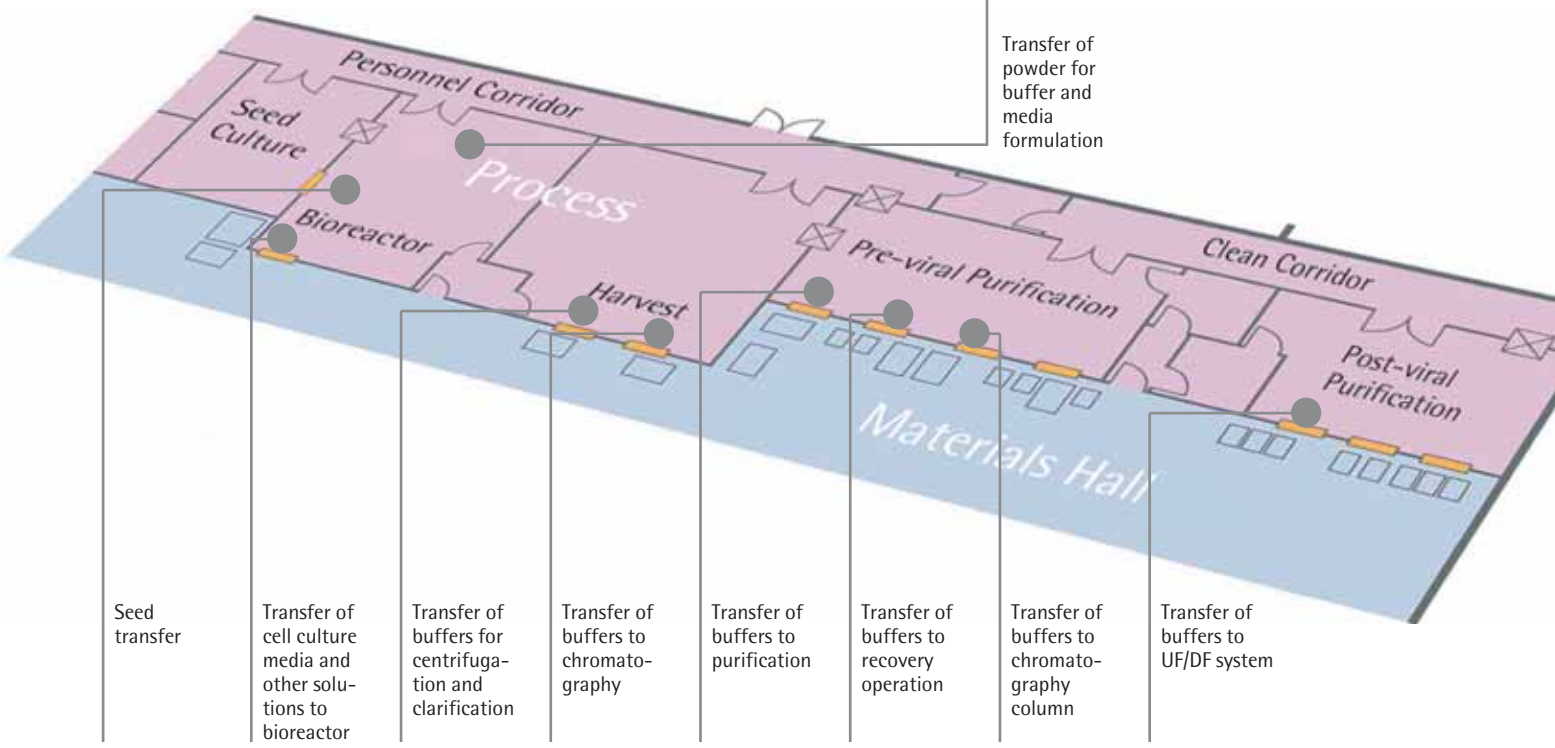

The RAFT System provides easy-to-use and reliable through-the-wall aseptic transfer of fluids between biomanufacturing zones. The attached diagram demonstrates segregation of media and buffer solutions maintained in the materials hall, enabling substantial reduction of higher classification cleanroom areas.

Sales and Service Contacts

For further contacts, visit www.sartorius-stedim.com

Europe

Germany
Sartorius Stedim Biotech GmbH
August-Spindler-Strasse 11
37079 Goettingen

Phone +49.551.308.0
Fax +49.551.308.3289

www.sartorius-stedim.com

Sartorius Stedim Systems GmbH
Schwarzenberger Weg 73–79
34212 Melsungen

Phone +49.5661.71.3400
Fax +49.5661.71.3702

www.sartorius-stedim.com

France
Sartorius Stedim Biotech S.A.
Z.I. des Paluds
Avenue de Jouques – BP 1051
13781 Aubagne Cedex

Phone +33.442.845600
Fax +33.442.845619

Sartorius Stedim France
4, rue Emile Baudot
91127 Palaiseau Cedex

Phone +33.1.6919.2100
Fax +33.1.6920.0922

Sartorius Stedim Aseptics S.A
Z.I. de Saux
Rue Ampère
65000 Lourdes

Phone +33.5.62.42.73.73
Fax +33.5.62.42.08.44

Austria
Sartorius Stedim Austria GmbH
Franzosengraben 12
A-1030 Vienna

Phone +43.1.7965763.18
Fax +43.1.796576344

Belgium
Sartorius Stedim Belgium N.V.
Leuvensesteenweg, 248/B
1800 Vilvoorde

Phone +32.2.756.06.80
Fax +32.2.756.06.81

Denmark
Sartorius Stedim Nordic A/S
Hoerskaetten 6D, 1.
DK-2630 Taastrup

Phone +45.7023.4400
Fax +45.4630.4030

Italy
Sartorius Stedim Italy S.p.A.
Via dell'Antella, 76/A
50012 Antella-Bagno a Ripoli (FI)

Phone +39.055.63.40.41
Fax +39.055.63.40.526

Netherlands
Sartorius Stedim Netherlands B.V.
Edisonbaan 24
3439 MN Nieuwegein

Phone +31.30.6025080
Fax +31.30.6025099

Spain
Sartorius Stedim Spain SA
C/Isabel Colbrand 10–12,
Planta 4, Oficina 121
Polígono Industrial de Fuencarral
28050 Madrid

Phone +34.91.3586102
Fax +34.91.3588804

Switzerland
Sartorius Stedim Switzerland GmbH
Lerzenstrasse 21
8953 Dietikon

Phone +41.1.746.50.00
Fax +41.1.746.50.50

U.K.
Sartorius Stedim UK Limited
Longmead Business Park
Blenheim Road, Epsom
Surrey KT19 9 QQ

Phone +44.1372.737159
Fax +44.1372.726171

America

USA
Sartorius Stedim North America Inc.
131 Heartland Blvd.
Edgewood, New York 11717

Toll-Free +1.800.368.7178
Fax +1.631.254.4253

Sartorius Stedim SUS Inc.
1910 Mark Court
Concord, CA 94520

Phone +1.925.689.6650
Toll Free +1.800.914.6644
Fax +1.925.689.6988

Asia | Pacific

India
Sartorius Stedim India Pvt. Ltd.
10, 6th Main, 3rd Phase Peenya
KIADB Industrial Area
Bangalore – 560 058

Phone +91.80.2839.1963|0461
Fax +91.80.2839.8262

Japan
Sartorius Stedim Japan K.K.
KY Building, 8–11
Kita Shinagawa 1-chome
Shinagawa-ku
Tokyo 140-0001

Phone +81.3.3740.5407
Fax +81.3.3740.5406

Malaysia
Sartorius Stedim Malaysia Sdn. Bhd.
Lot L3-E-3B, Enterprise 4
Technology Park Malaysia
Bukit Jalil
57000 Kuala Lumpur

Phone +60.3.8996.0622
Fax +60.3.8996.0755

Singapore
Sartorius Stedim Singapore Pte. Ltd.
10, Science Park Road, The Alpha
#02-25, Singapore Science Park 2
Singapore 117684

Phone +65.6872.3966
Fax +65.6778.2494

Australia
Sartorius Stedim Australia Pty. Ltd.
Unit 17/104 Ferntree Gully Road
Waverley Business Park
East Oakleigh, Victoria 3166

Phone +61.3.9590.8800
Fax +61.3.9590.8828

Biosafe and Biosteam are
registered trademarks of
Sartorius Stedim Aseptics S.A.

Specifications subject to change without notice. Printed in Germany on paper that has been bleached without any use of chlorine. W/sart-000 · G.
Publication No.: SPT1001-e08021 · Order No.: 85034-534-73

Sterile Tube Fuser & Hot Lips Tube Sealer®

Catalog

The Sterile Tube Fuser and Hot Lips Tube Sealer II provide a complete solution to aseptic fluid handling in pharmaceutical and biotech environments. These products allow for leakproof aseptic connections and thermal seals of large bore thermoplastic tubing. This catalog includes features, specifications and pricing information for both products. Please contact Wave Biotech for additional technical or validation information.

Sterile Tube Fuser - IRc

Hot Lips Tube Sealer II

Sterile Tube Fuser - IRcWW

The Sterile Tube Fuser

is a fully automated device for welding together thermoplastic tubing in a sterile operation without the need for a laminar flow cabinet. The machine is useful for connecting tubing between sterile containers, bags, and process equipment. The unit can connect large diameter (up to 7/8” OD) tubing for the rapid and easy transfer of large volumes. Major uses are bioprocessing and aseptic pharmaceutical applications.

The compact Sterile Tube Fuser (STF-IRc) uses infrared technology to control depyrogenation and welding temperatures. Disposable, single-use, PTFE coated blades are used in the process. The new, long awaited wet welding model, STF-IRcWW allows welding of liquid-filled C-Flex tubing.

Applications

- Sterile media and buffer transfer.
- Connection of bioreactors for feed and harvest.
- Process fluid transfer.
- In-process pooling.
- Final fill operations.

Features

- Welds any thermoplastic tubing from 6.4mm to 22.2mm OD (¼ in. to 7/8 in.) using interchangeable holders.
- Wet welding of 6.4,11.2,12.5 and 15.5mm OD C-Flex available in STF-IRcWW model.
- Use C-Flex®, PharMed®, Tygon®/PVC or similar tubing.
- Thermal weld provides exceptional strength.
- Make aseptic connections without a laminar flow cabinet.
- New, more compact design; portable.
- User-programmable for various tubing types.
- Requires only electrical service. 110/220VAC universal voltage.
- Proven, validated performance for GMP operations.

Specifications

Power:	110/220 VAC (auto switching) 1 Amp max.
Size:	381mm x 325mm x 254mm (15” L x 13” W x 10” H)
Weight:	16 Kg (35 lbs)
Max tubing OD:	22mm (7/8”)
Min tubing OD:	6.4mm (¼”)
Approvals:	CE, EMV
Typical fusing cycle:	~2 minutes
Cutting blades:	non-sterile, PTFE-coated, single-use

Quick Selection Guide - COMPONENTS

PART NUMBER	DESCRIPTION	IMAGE
STF-IRc	Sterile Tube Fuser -IRc -Compact - equipped with TUBE1-IR (15.5mm OD tube holder set). Pre-programmed for C-Flex, Sanipure ,PharMed and Tygon/PVC. 110/220VAC (auto switching).	
STF-IRcWW	Sterile Tube Fuser - IRc for Liquid-Filled Welding - equipped with TUBE1 -IR/WW (15.5mm OD wet welding tube holder set). Pre-programmed for C-Flex. 110/220VAC universal voltage.	
TUBE1-IR	Tube holder set for 15.5mm (5/8”) OD tubing.	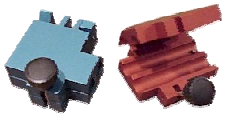
TUBE2-IR	Tube holder set for 19.1mm (3/4”) OD tubing.	
TUBE3-IR	Tube holder set for 11.2mm (7/16”) OD tubing.	
TUBE4-IR	Tube holder set for 6.4mm (1/4”) OD tubing.	
TUBE5-IR	Tube holder set for 8.0mm (5/16”) OD tubing.	
TUBE6-IR	Tube holder set for 9.6mm (3/8”) OD tubing.	
TUBE7-IR	Tube holder set for 12.5mm (1/2”) OD tubing.	
TUBE8-IR	Tube holder set for 22.2mm (7/8”) OD tubing.	
TUBE1-IR/WW	Tube holder set for 15.5mm (5/8”) OD tubing. For use with wet welding STF-IRcWW only.	
TUBE3-IR/WW	Tube holder set for 11.2mm (7/16”) OD tubing. For use with wet welding STF-IRcWW only.	
TUBE4-IR/WW	Tube holder set for 6.4mm (1/4”) OD tubing. For use with wet welding STF-IRcWW only.	
TUBE7-IR/WW	Tube holder set for 12.5mm (1/2”) OD tubing. For use with wet welding STF-IRcWW only.	
BLADES-IR/50	Single use stainless steel cutting blades with PTFE coating. Non-sterile. 50 blades/package.	
STF-IRc.003214	Two color thermal printer option for compact Sterile Tube Fuser - IRc. Includes one roll of paper.	
STF-IRc-CALKIT	Calibration verification kit for Sterile Tube Fuser. Includes Maintenance manual, Validation documents, PCKit, BLADESENSOR-K, & security key for access.	

The Hot Lips Tube Sealer II

is an ultraportable device for heat sealing thermoplastic tubing. The leakproof, tamperproof seal produced is ideal for ensuring inoculum, products, media and buffers do not leak as with tubing clamps or plugs on bioprocess bags and other vessels. Hot Lips is a fully automated device for sealing thermoplastic tubing from 6.4mm (1/4") OD to 31.8mm (1.25") OD in a sterile operation without the need for a laminar flow hood. Major uses are for sealing bags prior to transport, or after sampling and process fluid transfer.

Applications

- Use wherever a tamperproof, leakproof seal is desired.
- Sealing bioprocess bags and bioreactors.
- In-process pooling.
- Sampling operations.
- Storage vessel closure.

Features

- Seals any thermoplastic tubing from 6.4mm (1/4") OD to 31.8mm (1.25") OD.
- Use PharMed, C-Flex, PVC, Sanipure or similar tubing.
- Thermal seal provides tamperproof protection.
- Compact and ultraportable.
- User-programmable for various tubing types.
- Requires only electrical service 110/220VAC, auto switching.
- No compressed air or cooling water needed.
- No accessories required for operation.
- Made in the U.S.A. Proven, validatable performance.

Specifications

Power:	110/220 VAC universal voltage
Size:	165mm x 356mm x 203mm (6.5” W x 14” D x 8” H)
Weight:	8 Kg (18 lb)
Max tubing OD:	31.8mm (1.25”)
Min tubing OD:	6.4mm (0.25”)
Typical sealing cycle:	<2 minutes

Quick Selection Guide - COMPONENTS

PART NUMBER	DESCRIPTION	IMAGE
HLTS-II	Hot Lips Tube Sealer II - pre-programmed to thermally seal C-Flex, Sanipure, PVC, Tygon, & PharMed thermoplastic tubing 6.4mm (1/4") OD to 31.8mm (1.25") OD. 110/220VAC (auto switching) universal voltage. Please confirm plug type required where applicable. No accessories or disposables required.	
HLTS-PCKIT	PC kit for Hot Lips Tube Sealer. Allows user reset of register and reprogramming. Includes hardware and software.	
HLTS-II-CALKIT	Calibration verification kit includes Maintenance manual, Validation documents, PCKit with security key and jaw distance calibration tool.	

sartorius stedim biotech

Fluid Management Systems

Standard Flexel® 3D bioprocessing bags for Palletank® (US and Canada)

Features	Benefits
Multiple manufacturing sites	High security of supply
All connections extensively qualified	Safe and robust
Full compliance with ISO11137	Highest sterility assurance level
Standard design	Most designs available from stock
Designed to fit Palletank®	Market leading space saving bag containment system
¾" ID bottom drain	Quick transfer of process fluid
Various bag & filter sizes	High flexibility

Description
Flexel® 3D standard bags are designed for processing, storage and transport of large volume biopharmaceutical solutions in Sartorius Stedim Biotech's proven Palletank® containers. They provide a single-use alternative to traditional stainless steel vessels in a large variety of applications.

Cost reduction and risk reduction
Single-use systems used in biopharmaceutical manufacturing improve process safety as they reduce the risk of cross contamination from batch-to-batch and product-to-product. Costly and time consuming CIP & SIP operations are minimized. This results not only in significant cost savings within the entire manufacturing process, but also in the optimization of capacity utilization.

Applications
The multi-layer film construction of different materials provides a strong structure with low gas permeability and high chemical resistance for the safe processing of a wide range of biopharmaceutical fluids in a variety of applications such as:
- Buffers and media filtration & storage
- Bulk harvest
- Product pooling
- Fraction collection
- Sample collection
- Bulk intermediate filtration & hold
- Final product storage and transport

Flexibility
Standard Flexel® 3D bags are available as stand-alone bags with silicone tubing, stand-alone bags with C-Flex tubing and filter & bag assemblies incorporating a variety of filter and bag sizes allowing easy adoption to process volume and media. Multiple configurations that also integrate thermoweldable TPE tubing are provided for flexible incorporation into your process. Thus, sterile connection and disconnection devices like the BioWelder® and the BioSealer® can be used to allow safe connections and disconnections from and to another process step.

Female luer fittings with a needle free sampling port may be used for easy and convenient sampling, quick connects may be attached directly or adapted to a variety of connections and tri-clamps that are widely used in a production environment assure maximum flexibility.

Fast operation
The new defined range of standard Flexel® 3D bag systems incorporates 1,000 L standard bag solutions that enable the user to empty the bags quickly through a ¾" ID tubing.

Standard Flexel® 3D for Palletank®	
Bag Chamber:	Multiple layer film construction, including EVOH gas barrier layer ULDPE contact layer
Tubing:	Silicone, TPE
Fittings:	MPX Couplings, Female Luer Lock, MPC Male Coupling, Triclamp, Needle-less sampling port
Filters:	Sartopore® 2 Gamma Filter Capsule
Volumes:	100 L–1,000 L
Number of Ports:	Standard silicone: 100 L–1,000 L: 3 (2 top, 1 bottom) Standard TPE: 100 L–1,000 L: 4 (3 top, 1 bottom) Standard TPE & Sartopore® 2: 100 L–1,000 L: 4 (3 top, 1 bottom)
Sterilization:	by Gamma Irradiation

Security of Supply
Sartorius Stedim Biotech has established multiple manufacturing sites with consistent industrial processes. The expertise of designing Single Use solutions combined with collaborative supplier management and customer demand planning assures a state of the art product supported by a robust supply chain that can cope with strong market growth.

Validation
Flexel® bags have been qualified applying the most comprehensive and innovative test regimes. Biological, chemical and physical tests combined with extensive extractable testings provide users of Flexel® 3D bags with data representing the widest range of process fluids in a variety of processing conditions.

Full compliance with ISO11137 allows for a validated claim of sterility on all Sartorius Stedim Biotech single-use products with a sterility assurance level of 10^{-6} over the shelf life.

Quality Assurance
Sartorius Stedim Biotech Quality Systems for Single-use products follow applicable ISO and FDA regulations for Medical Devices. Design, Manufacture and Sterilization processes are conducted under conditions that mirror biopharmaceutical operations and meet cGMP requirements.

Flexel® 3D bags for Palletank® are tested for compliance to:
- USP <87>: Biological reactivity tests, in Vitro
- USP <88>: Biological reactivity tests, in Vivo
- USP <661>: Tests for plastic
- USP <788> and E.P. 2.9.19 : Particulate
- ISO 11737 : Bioburden
- ISO 11137 : Sterilization of Medical Devices

Supply Chain
The majority of standard Flexel® 3D bags for Palletank® systems are available from stock.

Ordering Information

1. Standard Flexel® 3D bags with silicone tubes

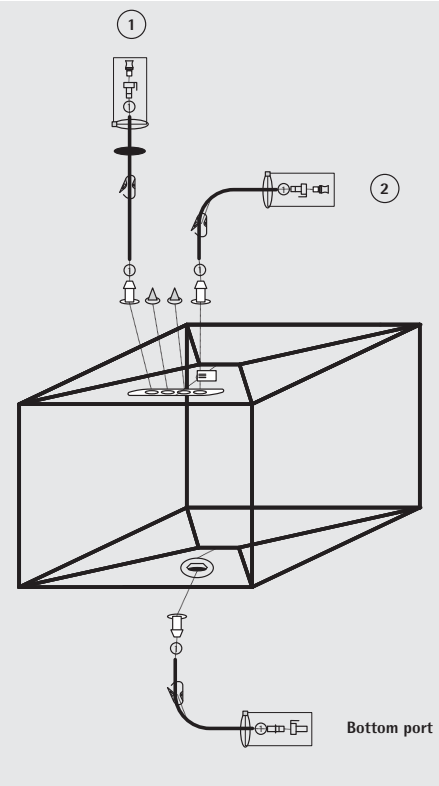

Standard Flexel® 3D bags with silicone tubes (100 L to 500 L)

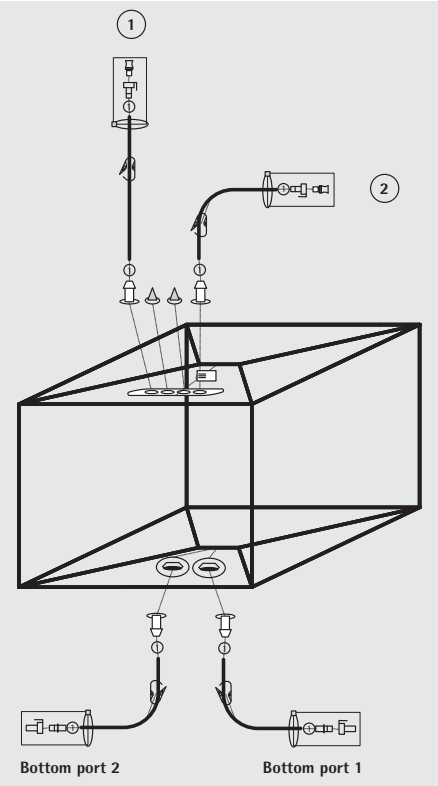

Standard Flexel® 3D bags with silicone tubes (1,000 L)

Part number	Description	Tubing	Top Port 1	Top Port 2	Bottom Port 1	Qty/Box
FXB207591	Flexel® 100L for Palletank® with GammaTag™	Silicone	1/2" × 11/16" × 1.5 m (60"), 1/2" MPX female + sealing plug	1/2" × 11/16" × 1.5 m (60"), 1/2" MPX female + sealing plug	1/2" × 11/16" × 1 m (40") 1/2" MPX male + sealing cap	10
FXB207592	Flexel® 200L for Palletank® with GammaTag™	Silicone	1/2" × 11/16" ×1.5 m (60"), 1/2" MPX female + sealing plug	1/2" × 11/16" × 1.5 m (60"), 1/2" MPX female + sealing plug	1/2" × 11/16" × 1 m (40"), 1/2" MPX male + sealing cap	10
FXB207593	Flexel® 500L for Palletank® with GammaTag™	Silicone	1/2" × 11/16" × 1.5 m (60"), 1/2" MPX female + sealing plug	1/2" × 11/16" × 1.5 m (60"), 1/2" MPX female + sealing plug	1/2" × 11/16" × 1 m (40"), 1/2" MPX male + sealing cap	3

Part number	Description	Tubing	Top Port 1	Top Port 2	Bottom Port 1	Bottom Port 2	Qty/Box
FXB207595	Flexel® 1000L for Palletank® – Silicone	Silicone	1/2" × 11/16" × 1.5 m (60") 1/2" MPX female + sealing plug	1/2" × 11/16" × 1.5 m (60") 1/2" MPX male + sealing plug	1/2" × 11/16" × 1 m (40") 1/2" MPX male + sealing cap	1/2" × 11/16" × 1 m (40") 1/2" MPX male + sealing cap	5

Ordering Information

2. Standard Flexel® 3D bags with TPE tubes

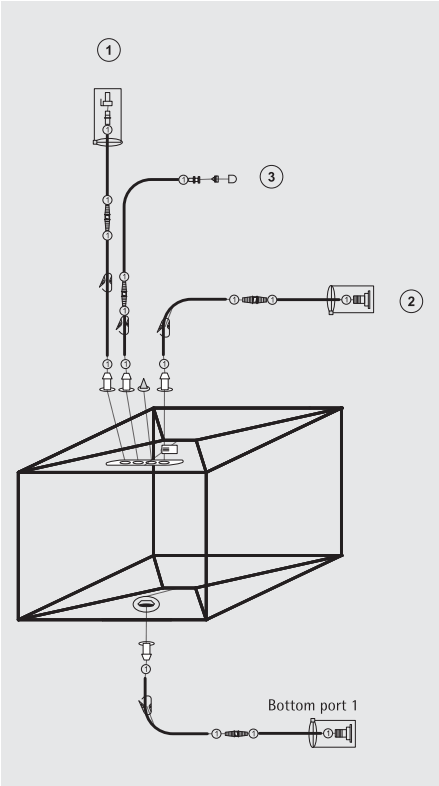

Standard Flexel® 3D bags with TPE tubes (100 L to 500 L)

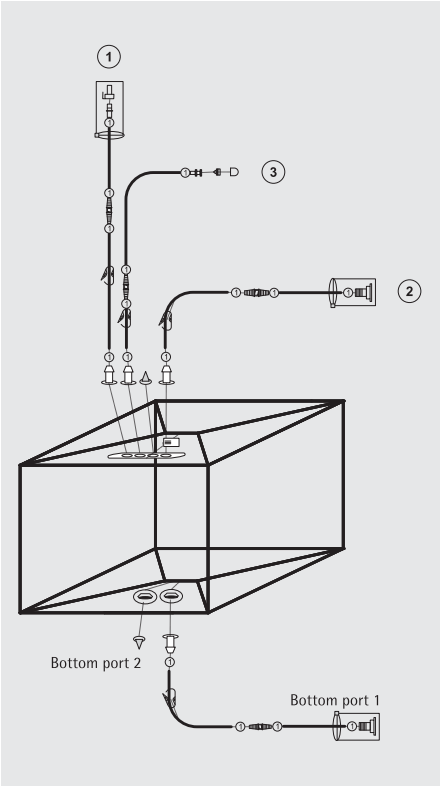

Standard Flexel® 3D bags with TPE tubes (1,000 L)

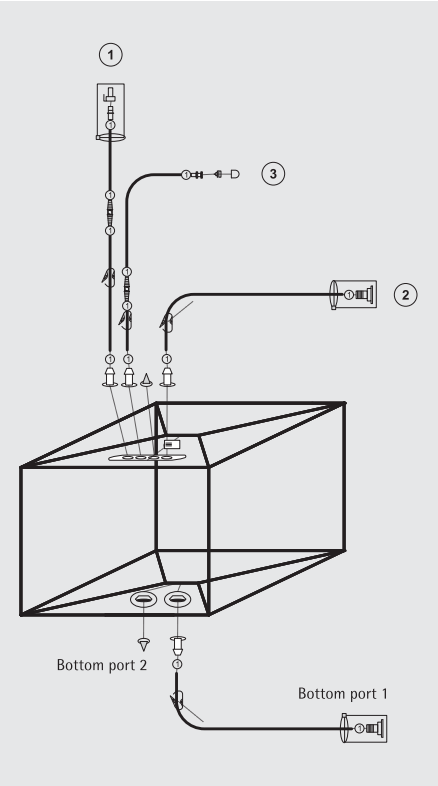

Standard Flexel® 3D bags with TPE tubes
High Flow Rate (1,000 L)

Part number	Description	Tubing	Top Port 1	Top Port 2	Top Port 3	Bottom Port 1	Qty/Box
FXB110925	Flexel® 100L for Palletank® – PTE	Silicone + Clear C-Flex® 374	1/2" × 3/4" × 1.5 m (60") 1/2" MPX male + sealing cap	1/2" × 3/4" × 1.5 m (60") 1–1/2" Tri-Clamp	1/8" × 1/4" × 1.1 m (40") LL female + needle free sampling port	1/2" × 3/4" × 1.5 m (60") 1–1/2" Tri-Clamp	4
FXB110927	Flexel® 200L for Palletank® – TPE	Silicone + Clear C-Flex® 374	1/2" × 3/4" × 1.5 m (60") 1/2" MPX male + sealing cap	1/2" × 3/4" × 1.5 m (60") 1–1/2" Tri-Clamp	1/8" × 1/4" × 1.1 m (40") LL female + needle free sampling port	1/2" × 3/4" × 1.5 m (60") 1–1/2" Tri-Clamp	2
FXB110929	Flexel® 500L for Palletank® – TPE	Silicone + Clear C-Flex® 374	1/2" × 3/4" × 1.5 m (60") 1/2" MPX male + sealing cap	1/2" × 3/4" × 1.5 m (60") 1–1/2" Tri-Clamp	1/8" × 1/4" × 1.1 m (40") LL female + needle free sampling port	1/2" × 3/4" × 1.5 m (60") 1–1/2" Tri-Clamp	2
FXB110930	Flexel® 1000L for Palletank® – TPE	Silicone + Clear C-Flex® 374	1/2" × 3/4" × 1.5 m (60") 1/2" MPX male + sealing cap	1/2" × 3/4" × 1.5 m (60") 1–1/2" Tri-Clamp	1/8" × 1/4" × 1.1 m (40") LL female + needle free sampling port	1/2" × 3/4" × 1.5 m (60") 1–1/2" Tri-Clamp	2
FXB111157	Flexel® 1,000L for Palletank® – HIGH FLOW – TPE	Silicone + Clear C-Flex® 374	1/2" × 3/4" × 1.5 m (60") 1/2" MPX male + sealing cap	3/4" × 1-1/8" × 1.5 m (60") silicone 1-1/2" Tri-Clamp	1/8" × 1/4" × 1.1 m (40") LL female + needle free sampling port	3/4" × 1-1/8" × 1.5 m (60") silicone 1-1/2" Tri-Clamp	2

Ordering Information

3. Standard Flexel® 3D bags with TPE tubes and Sartopore® 2 Gamma MidiCaps

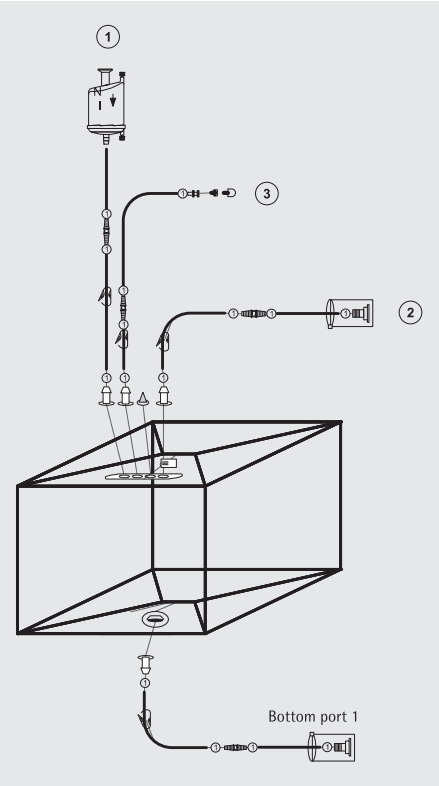

Standard Flexel® 3D bags with TPE tubes and Sartopore® 2 Gamma MidiCaps (100 L to 500 L)

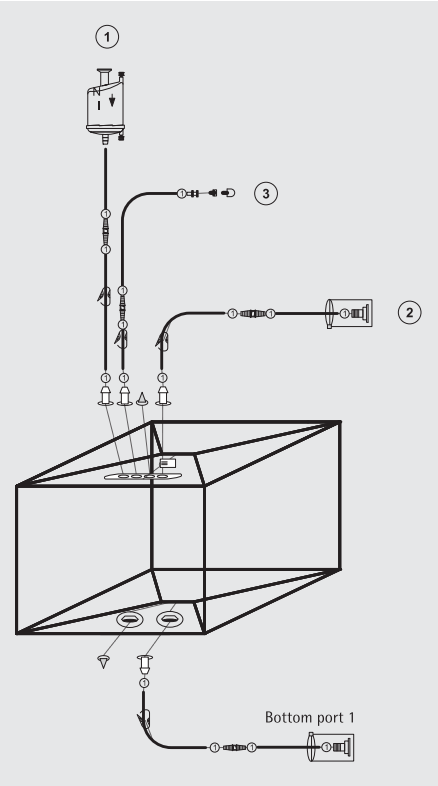

Standard Flexel® 3D bags with TPE tubes and Sartopore® 2 Gamma MaxiCaps (1,000 L)

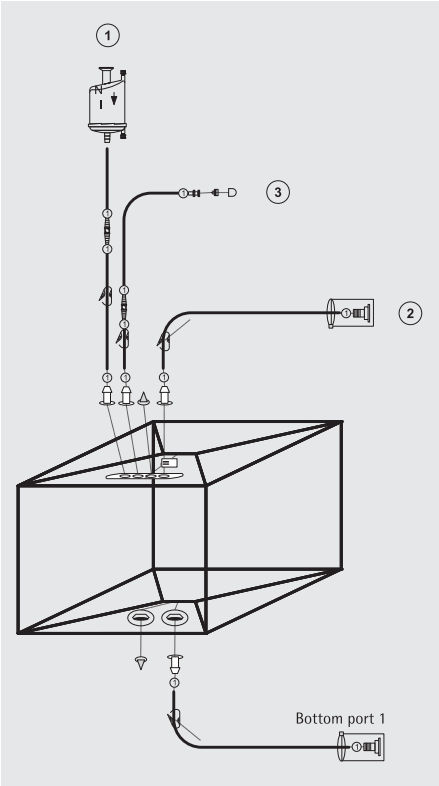

Standard Flexel® 3D bags with TPE tubes and Sartopore® 2 Gamma MaxiCaps - High Flow rate (1,000 L)

Standard Flexel® 3D bags with TPE tubes and Sartopore® 2 Gamma MidiCaps, 0.2 µm (100 L to 500 L)

Part number	Description	Tubing	Top Port 1	Top Port 2	Top Port 3	Bottom Port 1	Qty/Box
FXB110962	Flexel® 100L for Palletank® – TPE – Sartopore® 2 Gamma	Silicone + Clear C-Flex® 374	1/2" × 3/4" × 1.5 m (60") Sartopore® 2 Gamma, MidiCaps size 8, 0.2 µm, filter inlet 1.5" sanitary flange 1,000 cm²	1/2" × 3/4" × 1.5 m (60") 1–1/2" Tri-Clamp	1/8" × 1/4" × 1.1 m (40") LL female + needle free sampling port	1/2" × 3/4" × 1.5 m (60") 1–1/2" Tri-Clamp	3
FXB110964	Flexel® 200L for Palletank® – TPE – Sartopore® 2 Gamma	Silicone + Clear C-Flex® 374	1/2" × 3/4" × 1.5 m (60") Sartopore® 2 Gamma, MidiCaps size 9, 0.2 µm, filter inlet 1.5" sanitary flange 2,000 cm²	1/2" × 3/4" × 1.5 m (60") 1–1/2" Tri-Clamp	1/8" × 1/4" × 1.1 m (40") LL female + needle free sampling port	1/2" × 3/4" × 1.5 m (60") 1–1/2" Tri-Clamp	2
FXB110966	Flexel® 500L for Palletank® – TPE – Sartopore® 2 Gamma	Silicone + Clear C-Flex® 374	1/2" × 3/4" × 1.5 m (60") Sartopore® 2 Gamma, MidiCaps size 0, 0.2 µm, filter inlet 1.5" sanitary flange 4,500 cm²	1/2" × 3/4" × 1.5 m (60") 1–1/2" Tri-Clamp	1/8" × 1/4" × 1.1 m (40") LL female + needle free sampling port	1/2" × 3/4" × 1.5 m (60") 1–1/2" Tri-Clamp	2

Standard Flexel® 3D bags with TPE tubes and Sartopore® 2 Gamma MidiCaps, 0.1 µm (100 L to 500 L)

Part number	Description	Tubing	Top Port 1	Top Port 2	Top Port 3	Bottom Port 1	Qty/Box
FXB110975	Flexel® 100L for Palletank® – TPE – Sartopore® 2 Gamma	Silicone + Clear C-Flex® 374	1/2" × 3/4" × 1.5 m (60") Sartopore® 2 Gamma, MidiCaps size 8, 0.1 µm, filter inlet 1.5" sanitary flange 1,000 cm²	1/2" × 3/4" × 1.5 m (60") 1–1/2" Tri-Clamp	1/8" × 1/4" × 1.1 m (40") LL female + needle free sampling port	1/2" × 3/4" × 1.5 m (60") 1–1/2" Tri-Clamp	3
FXB110976	Flexel® 200L for Palletank® – TPE – Sartopore® 2 Gamma	Silicone + Clear C-Flex® 374	1/2" × 3/4" × 1.5 m (60") Sartopore® 2 Gamma, MidiCaps size 9, 0.1 µm, filter inlet 1.5" sanitary flange 2,000 cm²	1/2" × 3/4" × 1.5 m (60") 1–1/2" Tri-Clamp	1/8" × 1/4" × 1.1 m (40") LL female + needle free sampling port	1/2" × 3/4" × 1.5 m (60") 1–1/2" Tri-Clamp	2
FXB110977	Flexel® 500L for Palletank® – TPE – Sartopore® 2 Gamma	Silicone + Clear C-Flex® 374	1/2" × 3/4" × 1.5 m (60") Sartopore® 2 Gamma, MidiCaps size 0, 0.1 µm, filter inlet 1.5" sanitary flange 4,500 cm²	1/2" × 3/4" × 1.5 m (60") 1–1/2" Tri-Clamp	1/8" × 1/4" × 1.1 m (40") LL female + needle free sampling port	1/2" × 3/4" × 1.5 m (60") 1–1/2" Tri-Clamp	2

Standard Flexel® 3D bags with TPE tubes and Sartopore® 2 Gamma MaxiCaps, 0.2 and 0.1 µm (1,000 L)

Part number	Description	Tubing	Top Port 1	Top Port 2	Top Port 3	Bottom Port 1	Qty/Box
FXB110967	Flexel® 1,000L for Palletank® – TPE – Sartopore® 2 Gamma	Silicone + Clear C-Flex® 374	1/2" × 3/4" × 1.5 m (60") Sartopore® 2 Gamma, MaxiCaps size 2, 0.2 µm, filter inlet 1.5" sanitary flange 1.2 m²	1/2" × 3/4" × 1.5 m (60") 1–1/2" Tri-Clamp	1/8" × 1/4" × 1.1 m (40") LL female + needle free sampling port	1/2" × 3/4" × 1.5 m (60") 1–1/2" Tri-Clamp	1
FXB110978	Flexel® 1,000L for Palletank® – TPE – Sartopore® 2 Gamma	Silicone + Clear C-Flex® 374	1/2" × 3/4" × 1.5 m (60") Sartopore® 2 Gamma, MaxiCaps size 2, 0.1 µm, filter inlet 1.5" sanitary flange 1.2 m²	1/2" × 3/4" × 1.5 m (60") 1–1/2" Tri-Clamp	1/8" × 1/4" × 1.1 m (40") LL female + needle free sampling port	1/2" × 3/4" × 1.5 m (60") 1–1/2" Tri-Clamp	1

Standard Flexel® 3D bags with TPE tubes and Sartopore® 2 Gamma MaxiCaps (1,000 L – High flow rate)

Part number	Description	Tubing	Top Port 1	Top Port 2	Top Port 3	Bottom Port 1	Qty/Box
FXB111153	Flexel® 1,000L for Palletank® HIGH FLOW – TPE – Sartopore® 2 Gamma	Silicone + Clear C-Flex® 374	1/2" × 3/4" × 1.5 m (60") Sartopore® 2 Gamma, MaxiCaps size 2, 0.2 µm, filter inlet 1.5" sanitary flange 1.2 m²	3/4" × 1-1/8" × 1.5 m (60") silicone 1-1/2" Tri-Clamp	1/8" × 1/4" × 1.1 m (40") LL female + needle free sampling port	3/4" × 1-1/8" × 1.5 m (60") silicone 1-1/2" Tri-Clamp	1
FXB111154	Flexel® 1,000L for Palletank® HIGH FLOW – TPE – Sartopore® 2 Gamma	Silicone + Clear C-Flex® 374	1/2" × 3/4" × 1.5 m (60") Sartopore® 2 Gamma, MaxiCaps size 2, 0.1 µm, filter inlet 1.5" sanitary flange 1.2 m²	3/4" × 1" × 1.5 m (60") 1–1/2" Tri-Clamp	1/8" × 1/4" × 1.1 m (40") LL female + needle free sampling port	3/4" × 1" × 1.5 m (60") 1–1/2" Tri-Clamp Silicone	1

Sartorius Stedim Biotech GmbH
August-Spindler-Strasse 11
37079 Goettingen, Germany

Phone +49.551.308.0
Fax +49.551.308.3289
www.sartorius-stedim.com

Sartorius Stedim North America Inc.
5 Orville Drive
Bohemia, NY 11716
Toll-Free +1.800.368.7178
Fax +1.631.254.4253

Specifications subject to change
without notice. Printed and copyrighted
by Sartorius Stedim Biotech GmbH
W · G
Publication No.: SPT2005am10072
Order No.: 85034-536-40
Ver. 07 | 2010

sartorius stedim biotech

Flexel® 3D Palletank® for storage

Fluid Management Systems

Key features & benefits

Patented system	Perfect fit and protection of the Flexel® 3D Bag in its Palletank®
Standard design	Most design are available from stock
Stackable version	Space saving containment system
Technology integration support	For a successful Single-Use manufacturing implementation and validation

Introduction
The Palletank® for storage are stainless steel containers designed for the safe and robust storage of biopharmaceutical fluids contained in Flexel® 3D Bags. They are available in volumes of 50 L, 200 L and 500 L to be used with 50 L, 100 L | 200 L and 500 L Flexel® 3D bags. The Flexel® 3D Bag are manufactured according to a patented design that precisely fits the Palletank®.

Applications
Palletank® Systems that incorporate Flexel® 3D Bags have been designed for the safe processing of a wide range of biopharmaceutical fluids in a variety of applications such as:
- Buffers and media storage
- Bulk harvest
- Product pooling
- Fraction collection
- Sample collection
- Bulk intermediate hold
- Final product transport

Space-saving
The stackable version of the Flexel® 3D Palletank® for storage enables users to meet the complex in-process demands as well as the high requirements for storage while maximizing the utilization of the available clean room area. It saves up to 50% of the space required for cylindrical drums.

Safety
Flexel® 3D Bags coupled with the rigid structure of Palletank® provide a stable and secure solution for processing, storage and transportation of buffers, media, intermediates and final bulk products.

Palletank® family
Besides the Palletank® for storage, the product range of Palletank® container includes the following lines specifically developed for the various application requirements on fluid management in the biopharmaceutical industry:
- Palletank® for shipping
- Palletank® for in-process fluid handling
- Palletank® for weighing
- Palletank® for recirculation mixing

Technology Integration Support
Sartorius Stedim Biotech supports users from the design & implementation phase of a new production facility with the most comprehensive support program that ensures successful design implementation and validation of Single-Use Manufacturing.

Security of Supply
Sartorius Stedim Biotech has established multiple manufacturing sites with consistent industrial processes. The expertise of designing Single-Use solutions based on collaborative supplier management and customer demand planning assures a state of the art and robust supply chain that can cope with strong market growth.

Quality Assurance
Flexel® 3D Palletank® Systems are designed, developed and manufactured in accordance with a ISO 9001 certified Quality Management System. They undergo extensive testing before shipping

Specifications

1. Palletank® for storage

Description	Palletank® 200 L for storage	Palletank® 500 L for storage
Bag Volume(s)	100 L or 200 L	500 L
Construction Material	304L Stainless Steel	
Surface Finishing	Bead Blasted	
Dimensions (w × d × h)	789 × 592 × 891 mm (31.2 × 23.3 × 35.1 in)	1192 × 792 × 1010 mm (46.9 × 31.2 × 39.7 in)
Weight	35 kg (77.17 lb)	92 kg (202.8 lb)
Bottom Gate	1	1
Stackability	No	No

2. Palletank® for storage stackable

Description	Palletank® 50 L for storage stackable	Palletank® 200 L for storage stackable	Palletank® 500 L for storage stackable
Bag Volume(s)	50 L	100 L or 200 L	500 L
Construction Material	304L Stainless Steel		
Surface Finishing	Bead Blasted		
Dimensions (w × d × h)	490 × 490 × 750 mm (19,3 × 19,3 × 29,5 in)	789 × 592 × 915 mm (31.2 × 23.3 × 36 in)	1192 × 792 × 1060 mm 46.9 × 31.2 × 41.7 in
Weight	24 kg (52.8 lb)	48.4 kg (106.7 lb)	87.5 kg (192.9 lb)
Bottom Gate | Sliding Gate	1	1	1
Stackability (Static)	3 high	3 high	2 high

3. Ancillary products

3.1. Dolly

Description	Dolly for Palletank® 50 L for Storage and Shipping	Dolly for Palletank® 200 L for Storage and Shipping	Dolly for Palletank® 500 L for Storage and Shipping
Construction Material	304L and polyamide (wheels)		
Surface Finishing	Glass Bead blasted		
Dimensions (w × d × h)	490 × 490 × 185 mm (19.3 × 19.3 × 7.3 in)	815 × 615 × 188 mm (32.1 × 24.2 × 6.4 in)	1215 × 815 × 161 mm (47.8 × 32.1 × 6.4 in)
Weight (approx.)	7 kg (15.4 lb)	10 kg (22 lb)	18 kg (39.7 lb)

3.2. Weighing platforms

The IFS4 flat-bed scales are entirely constructed of stainless steel and have an extremely low height, making it ideally suited for floor installation without a pit or anchoring. The ramp is securely attached to the scale using special retainers for prevention of force shunt. This high-quality platform can be connected to any of a wide range of indicators, for use as a Class III legal measuring instrument or without legal verification. The CIS1 Combics 1 indicator allows strain gauge weighing with flat bed scales as well as with load cells to be connected.

	IFS4-150GG-I	IFS4-300LI-I	IFS4-1000RN-I
Weighing capacity	150 kg (330.7 lb)	300 kg (661.4 lb)	1000 kg (2204.6 lb)
Platform size	600 × 600 mm (23.6 × 23.6 in)	1000 × 800 mm (39.3 × 31.5 in)	1500 × 1250 mm (59 × 49.2 in)
Height	Standard: 35 mm	Standard: 35 mm	Standard: 45 mm
Load Plate	AISI304 | 1.4301 (V2A) bead-blasted	AISI304 | 1.4301 (V2A) bead-blasted	AISI304 | 1.4301 (V2A) bead-blasted
Resolution	30.000 d	30.000 d	30.000 d
Readability	5 g	10 g	50 g
Suitable with Palletank® Storage and Storage Stackable	50 L	200 L	500 L

Refer to specific Sartorius Mechatronics datasheet for Combics indicators ranges, printers and other accessories specifications and ordering information.

Integrated features

Features	Benefits	Palletank® for storage	Palletank® for storage stackable
Level marks	allow rapid visual monitoring of the fluid level in the bag	•	• *
Integrated pallet	allows easy carriage by pallet-jack or forklift	•	•
Tubing & Fitting Tray	simplifies fluid handling operations & provides a convenient and secure place for inlet & outlet tubing assemblies during transport.	•	•
Lid	protects the bag against dust and light		• *
Bottom gate | Sliding gate	allows passage of large bore tubing, 1,5" tri clamps, QC bags and filters; facilitates bag positioning and maintain in position	•	•
Stacking corner	enables the stacking of Flexel® 3D Systems in order to maximise the utilisation of available clean room area		•
Dolly (accessory)	facilitates the movement of material throughout a facility	•	•

* Except 50 L volume

Ordering Information

Order Code	Description
FXC110888	Palletank® 200 L for storage
FXC110889	Palletank® 500 L for storage
FXC113946	Palletank® 50 L for storage stackable
FXC110733	Palletank® 200 L for storage stackable
FXC110734	Palletank® 500 L for storage stackable
FXA113988	Dolly for Palletank® 50 L for storage
FXS102254	Dolly for Palletank® 100 L | 200 L for storage & shipping
FXS102256	Dolly for Palletank® 500 L for storage & shipping

Sartorius Stedim Biotech GmbH
August-Spindler-Strasse 11
37079 Goettingen, Germany

Phone +49.551.308.0
Fax +49.551.308.3289
www.sartorius-stedim.com

USA Toll-Free +1.800.368.7178
UK +44.1372.737159
France +33.442.845600
Italy +39.055.63.40.41
Spain +34.90.2110935
Japan +81.3.3740.5407

Specifications subject to change
without notice. Printed and copyrighted
by Sartorius Stedim Biotech GmbH
W · G
Publication No.: SPL2002-e10016
Order No.: 85030-533-48
Ver. 01 | 2010

sartorius stedim biotech

Flexel® 3D Plastic Palletank® for Storage

Fluid Management Systems

Features & Benefits

PP and ABS containers	Low cost and robust storage solution
Stackable when full	Minimize floor space utilizations
Foldable and collapsible when empty	Minimize storage volume
Low tare weight	Easy setting and maneuverability
Smooth scratch-resistant plastic surface	Clean room compatible
Standard product	Available from stock

Introduction
The Plastic Palletank® for storage represents a cost-effective containment solution for the storage and processing of biopharmaceutical fluids contained in Flexel® 3D Bags. Their flat, smooth surfaces and rounded corners facilitate cleaning and sanitization for clean room operations. The Plastic Palletank® for storage are foldable for minimal storage space when empty. They are also stackable for optimal floor space utilization when filled with biopharmaceutical solutions. They are available as standard products with volumes of 200 L, 500 L and 1000 L that perfectly fit with 100 L|200 L, 500 L and 1000 L Flexel® 3D Bags.

Applications
The Plastic Palletank® for storage with Flexel® 3D Bags have been designed for the safe storage and processing of a wide range of biopharmaceutical fluids in a variety of applications such as:

- Buffers and media storage
- Bulk harvest
- Product pooling
- Fraction collection
- Sample collection
- Bulk intermediate hold

Optimal space utilization
The Plastic Palletank® for storage allows for secure stacking, up-to 3-high, to meet the complex in-process and storage requirements, while maximizing the utilization of the available clean room area. It saves up-to 50% of the space required for cylindrical drums. When not in use, the collapsible tank can be folded to approximately half of its height for intermediate storage.

Volume	Floor space required		Space saving
	Plastic Palletank® for storage	Drum	
200 L	9 × 200 L Stacked 3-high 1.5 m^2 (16.1 sq ft)	9 × 200 L 3.2 m^2 (34.4 sq ft)	50%
500 L	6 × 500 L Stacked 2-high 3 m^2 (32.3 sq ft)	6 × 500 L 3.7 m^2 (40 sq ft)	20%
1000 L	2 × 1000 L Stacked 2-high 1.3 m^2 (14 sq ft)	2 × 1000 L 2.3 m^2 (25 sq ft)	40%

Easy setting and use
One person can easily prepare a Plastic Palletank® for storage; the walls are raised and locked in place by hand. Their low tare weight ensures easier operator manipulation and facilitates intra facility transfer.

Hygienic design
The Plastic Palletank® for storage is not subject to rust and corrosion due to all plastic construction. The containers are made from a robust, scratch-resistant plastic material. The dismountable flat, smooth walls and the rounded corners facilitate cleaning operations. The Plastic Palletank® for storage is compatible with cleaning and decontaminating agents commonly used in the biopharmaceutical industry.

Specifications

1. Plastic Palletank® for storage

Description		STD Plastic Palletank® for storage		
		200 L	500 L	1000 L
Part Number		FXC116215	FXC116216	FXC116217
Bag Volume(s)		100 L | 200 L	500 L	1000 L
Main Constrution Material		PP	ABS	ABS
Dimensions (w × d × h) Approx.	Unfolded	805 × 607 × 969 mm 32 × 24 × 38 in.	1215 × 805 × 1086 mm 48 × 31 × 43 in.	1225 × 1022 × 1437 mm 48 × 40 × 57 in.
	Folded	805 × 607 × 510 mm 32 × 24 × 20 in.	1215 × 805 × 572 mm 48 × 31 × 22 in.	1225 × 1022 × 598 cm 48 × 40 × 23 in.
Weight incl. lid (approx.)		25 kg (55 lb)	79 kg (174 lb)	125 kg (275 lb)
Bottom Gate		1	1	2
Stackability -Static	Folded	5	3	3
	Unfolded and full	3	2	2

2. Ancillary products

a. Dolly

Description	STD Palletank® Accessory Dolly		
	200 L	500 L	1000 L
Part Number	FXA116630	FXA116631	FXA116632
Construction Material	304 L and polyamide (wheels)		
Surface Finishing	Glass bead blasted		
Dimensions (w × d × h)	807 × 607 × 214 mm 32 × 24 × 8 in.	1207 × 807 × 214 mm 47 × 32 × 8 in.	1207 × 1007 × 214 mm 47 × 39 × 8 in.
Weight (approx.)	10 kg (22 lb)	20 kg (44 lb)	22 kg (48 lb)

b. Weighing Platform

	IFS4-300LL-I	IFS4-600RN-I	IFS4-1500RN-I
Weighing Capacity	300 kg | 1322 lb	600 kg | 1322 lb	1500 kg | 3306 lb
Platform Size (D × W)	1000 × 1000 mm 39 × 39 in.	1500 × 1250 mm 59 × 49 in.	1500 × 1250 mm 59 × 49 in.
Height	Standard: 35 mm | 1.4 in.	Standard: 45 mm | 1.8 in.	Standard: 45 mm | 1.8 in.
Load Plate	AISI304 | 1.4301 (V2A) bead blasted	AISI304 | 1.4301 (V2A) bead blasted	AISI304 | 1.4301 (V2A) bead blasted
Resolution	30.000 d	30.000 d	30.000 d
Readability	10 g	20 g	50 g
Suitable with Plastic Palletank® storage	200 L	500 L	1000 L

Please contact your Sartorius Mechatronics Sales Representative for detailed ordering information.

Ordering Information

FXC116215	STD Plastic Palletank® Storage 200 L
FXC116216	STD Plastic Palletank® Storage 500 L
FXC116217	STD Plastic Palletank® Storage 1000 L
FXA116630	STD Palletank® Accessory Dolly 200 L (Plastic Storage)
FXA116631	STD Palletank® Accessory Dolly 500 L (Plastic Storage)
FXA116632	STD Palletank® Accessory Dolly 1000 L (Plastic Storage)

a. Dolly

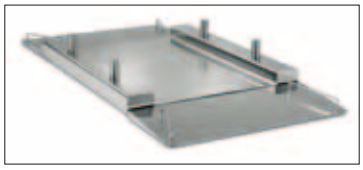

b. Weighing Platform

Sartorius Stedim Biotech GmbH
August-Spindler-Strasse 11
37079 Goettingen, Germany

Phone +49.551.308.0
Fax +49.551.308.3289
www.sartorius-stedim.com

USA Toll-Free +1.800.368.7178
UK +44.1372.737159
France +33.442.845600
Italy +39.055.63.40.41
Spain +34.90.2110935
Japan +81.3.3740.5407

Specifications subject to change without notice. Printed and copyrighted by Sartorius Stedim Biotech GmbH. | W
Publication No.: SPT2022-e11062
Order No.: 85032-538-70
Ver. 06 | 2011

Xcellerex®

XDR Single-Use Bioreactors

Introduction

The XDR Single-Use Bioreactor is a fully-integrated system that delivers proven stirred-tank performance across a wide range of cell lines. Single use technology eliminates time consuming and costly clean in place (CIP), steam in place (SIP) and cleaning validation procedures. The system's turnkey design enables fast installation and startup as well as rapid batch-to-batch turnover and increased process flexibility compared to fixed stainless steel hard piped vessels.

The XDR is offered in five sizes (50, 200, 500, 1000, and 2000L) with working volumes ranging from 10L to 2,000L. The system's unique design enables each XDR to operate down to 20% of maximum working volume (5:1 turn-down ratio), which can often eliminate the need for an additional seed reactor and related costs. Each reactor system includes a stainless steel vessel, vital process instrumentation, state-of-the-art control automation, and an optimized single-use bioreactor bag assembly. For high-density microbial applications, ask about the XDR-50 Turbo model.

SYSTEM SNAPSHOT

- Fully-integrated, turnkey GMP system
- Proven, scalable stirred tank performance across a wide range of cell lines
- Single-use design eliminates CIP/SIP
- Operating volumes of 10L to 2,000L
- Essential process instrumentation included and fully characterized
- Integrated temperature control and dimpled vessel jacket for efficient heat transfer
- Powerful, user-friendly control system
- Predictive modeling and Xcellerex process expertise eliminates start-up headaches and ensures process efficiency

▶Efficient, Convenient Vessel Design The vessel features a dimpled jacket heat transfer surface for efficient heating and cooling, a high performance bottom-mounted magnetic drive agitator system that facilitates loading and coupling of the single-use bag assembly, load cells for weight measurement, an exhaust filter heater box, flexible hoses for the heat transfer fluid, and a tubing manager.

▶Critical Process Instrumentation Mass flow controllers, peristaltic pumps, and probe transmitters are built into the cabinet adjacent to the vessel, and an external temperature control unit is available as an option for process heating/cooling. The system requires only gases, power and minimal water for full functionality.

XDR 2000 ▶

▶Powerful, User-Friendly Controls The XDR is equipped with a fully integrated control console, featuring intuitive process controls, data historian, and robust automation hardware/software. The system enables precise process control, and offers convenient real-time trending and other valuable data. When coupled with Xcellerex's process development experience and predictive modeling support, the XDR control platform assures optimized first-run process performance and reliability through tech transfer and scale-up.

▶Robust Single-Use Components The XDR irradiated single-use bag assembly consists of a USP Class VI LDPE fluid contact layer, tubings for liquid additions and harvest, sampling and probe ports, a disposable pressure sensor, filtered gas lines, and high-functioning agitator system. The agitator includes a HDPE bottom mounted impeller and a unique sparge system consisting of microporous stainless steel disks and optional drilled holes that together impart the system with tremendous flexibility crucial for today's cell culture processes. Xcellerex also maintains multiple supply sources to guard against supply chain disruptions.

Expert process support from Xcellerex With years of experience running and supporting GMP biomanufacturing operations, Xcellerex designed the XDR system to deliver complete process control from the moment each system starts up. No other single-use bioreactor is available with the XDR's depth of characterization, process support, and GMP-readiness. Xcellerex is uniquely able to deliver critical control automation with instrumentation, functionality, process modeling, tech transfer, and scalability.

Key XDR Advantages

- 5:1 turndown means each XDR can operate at 20% of maximum working volume, doing the work of multiple reactors
- True plug-and-play performance: Connect gases and power and get started
- Robust, self-installing magnetically-driven bottom-mount impeller: No rotating seals, insertable shafts and connection hassles
- Jacketed vessel ensures uniform temperature distribution throughout reactor
- Flexible control systems automate temperature shifts, feeds, changes to sparge composition
- Multiple probe configurations available, including pH, DO, CO2, and biomass
- Accurate gas control using mass flow controllers on all systems (optional MFC for headspace on XDR50)
- Bag material sourced from multiple manufacturers for supply chain security
- Single-use design eliminates time consuming CIP, SIP and cleaning validations procedures
- XDR Single Use Reactor Systems are Factory Acceptance Tested (FAT) prior to delivery and Site Acceptance Tested (SAT) upon installation
- Each XDR Single Use Reactor System is shipped with a Turnover Package which includes XDR Operating Manual, System Specifications, FAT commissioning report, system drawings, component operating manuals, calibration records, and optional IQ/OQ protocols
- Xcellerex process experience and know how is built into every XDR System: our process development expertise ensures that the process is up and running right the first time
- Xcellerex offers extensive XDR-specific predictive modeling and expert scale-up support
- Enhanced sparge control and CO2 stripping capabilities not offered on other single use systems
- Designed and fully characterized to deliver scalable cGMP processes from 10L to 2000L
- Xcellerex has years of cGMP manufacturing experience operating the XDR system. GMP product made in the XDR is currently being used in clinical trials and commercial XDR facilities are currently being prepared for commissioning.

All specifications are subject to change without notice.

SYSTEM SPECIFICATIONS

		XDR-50	XDR-200	XDR-500	XDR-1000	XDR-2000
BIOREACTOR						
Max Working Volume (L)		50	200	500	1000	2000
Min Working Volume (L)		10	40	100	200	400
Volume turn-down ratio		5:1	5:1	5:1	5:1	5:1
Tank ID (in)		12	22	30	38	48
H/D		2.5	1.5	1.5	1.5	1.5
Vessel Material of Construction		Jacketed 304 SS	Jacketed 304 SS	Jacketed 304 SS	Jacketed 304 SS	Jacketed 304 SS
Filter Heater Box		1	1	1	1	1
Bag Hoist		NA	NA	NA	Automated	Automated
Impeller		Bottom mounted, magnetically-driven, single-use impeller integrated with bag assembly				
Impeller type		M40E				
Impeller diameter (in)		8	8	10	12	16
Di/Dt		0.67	0.36	0.33	0.33	0.33
Impeller location		Center 90^{0}	15^{0} off center	15^{0} off center	15^{0} off center	15^{0} off center
Sparger	Standard	Stanless steel sintered disks	Stanless steel sintered disks	Stanless steel sintered disks	Stanless steel sintered disks	Stanless steel sintered disks
	Optional	Drilled Hole	Drilled Hole	Drilled Hole	Drilled Hole	Drilled Hole
		CO2 stripping	CO2 stripping	CO2 stripping	CO2 stripping	CO2 stripping
PROCESS INSTRUMENTATION						
pH probes		1	2	2	2	2
DO probes		1	2	2	2	2
MFCs (Brooks)	Standard	4	4	4	4	4
	Additional (optional)	2	2	2	2	2
Pumps		3 Pumps are standard. Additional pumps are available as an option				
Temperature Control Unit		Optional: 3 kw heater	Optional: 9 kw heater			
		Optional: 3 kw heater/ 0.5 ton chiller combo	Optional: 9 kw heater/ 1.5 hp chiller combo			
Load Cells		3	4	4	4	4
Utility Requirements		Process gases / 110V, single phase, 60 hz / TCU: 230V, 3 phase, 60 hz (EU: 380V, 3 phase, 50 hz)				
E-Stop		Integrated Safety Circuit for pumps, agitator, TCU, and filter heater				
CONTROL UNIT *(see page 5 for additional detail)*						
Integrated Control Panel		Built to GAMP5 standards/ 21 CFR Part 11 Compliant				
Hardware		Rockwell/ Allen Bradley				
Operator Interface		Wonderware HMI				
Data Historian		Wonderware				
Programming		Rockwell Allen Bradley/Wonderware Archestra				

NOTE: This document describes standard systems and commonly requested options. Additional custom-engineered systems are also available to meet unique application needs. Ask your Xcellerex representative for details.

PERFORMANCE CONTROL SPECIFICATIONS

All specifications are subject to change without notice.

		XDR-50	XDR-200	XDR-500	XDR-1000	XDR-2000
pH	Range	2-12 pH units				
	Accuracy	± 0.05 pH units				
DO	Range	0-100% atmospheric saturation				
	Accuracy	± 1.0% of setpoint				
Sparge Rate (slpm)	Air*	0-5	0-5	0-10	0-10	0-20
**Additional MFC/sparge ranges can be supplied based on application requirements*	O_2*	0-5	0-5	0-10	0-10	0-20
	CO_2*	0-5	0-5	0-10	0-10	0-20
	Air Headsweep*	0-10	0-10	0-20	0-20	0-25
Temperature	Range	4-60 °C				
	Accuracy	± 0.1 °C				
Bag Pressure	Range	0 - 30 psig (0 - 2068 mbar)				
	Accuracy	± 0.1 psig (± 6.89 mbar)				
Agitation (rpm)		0-360	0-360	0-250	0-140	0-115
Load Cell Accuracy		± 0.02% of max bag volume				

NOTE: For high-density microbial applications, please ask about the XDR-50 Turbo system.

SYSTEM DIMENSIONS

	XDR-50	XDR-200	XDR-500	XDR-1000	XDR-2000
Width (Vessel & Instrumentation)	43.375 in (111 cm)	52.25 in (133 cm)	57 in (145 com)	64 in (163 cm)	23.375 in (182 cm)
Depth (Vessel & Instrumentation)	28 in (71 cm)	37 in (94 cm)	48 in (122 cm)	52 in (132 cm)	61 in (155 cm)
Height (Vessel & Instrumentation)	73.5 in (187 cm)	85.125 (216 cm)	93.75 in (238 cm)	115 in (292 cm)	140 in (356 cm)

HMI Control Unit Dimensions: 23.375 in x 30.75 in x 56.75 in (60 cm x 78 cm x 144 cm)

FULLY-INTEGRATED XDR BIOREACTOR BAG ASSEMBLY

- USP Class VI
- LDPE fluid contact layer
- Gamma Irradiated
- Validation Guide

Standard "off-the-shelf" designs impart flexibility for a wide range of cell culture and microbial processes.

Custom application-specific designs available upon request.

Each bag comes complete with:

- C-flex tubing (for tube-to-tube aseptic welding)
- Aseptic connectors
- Multiple feed/addition lines
- Harvest line
- Exhaust filter
- Sparge filter
- Overlay filter
- Pressure sensor
- Sampling ports
- Probe ports
- Thermowell (for temperature probe)
- Proprietary XDR impeller/sparge system

CONTROL AUTOMATION PLATFORM

The XDR Control Platform is comprised of a Rockwell/Allen Bradley controller with Wonderware HMI and data historian. The platform delivers precise process control and offers a level of flexibility and convenience that is unmatched in the industry.

In addition to robust control architecture, the XDR features a highly intuitive user interface that speeds operator training and efficiency.

▶Intuitive, Powerful Interface

The XDR control system user interface was designed to provide fast and easy, yet comprehensive control over process configuration to the operator. The easy-to-read screens enable dynamic adjustment to key variables, and enable the operator to review complete configuration schemes at a glance. The high clarity touchscreen display provides an intuitive, visual interface that operators can use with confidence. *(See Screen 1)*

The XDR system enables rapid understanding and interpretation of active control strategies through the use of graphical symbols. *(See Screen 2)*

In addition, set-point automation tables enable the easy automation of set-point changes, permitting live adjustments to ramp or step to new value. *(See Screen 3)*

▶Powerful Control Strategies for Fast Response, Tight Control

- Cascade control strategies of pH, DO, and volume result in very tight control of critical process conditions.
- Flexible closed loop control of critical process parameters support improved yields:
  - Agitation
  - Gas mixing
  - Liquid addition and removal
  - pH
  - Weight
  - Sparge
  - Gas overlay
  - Temperature
  - DO *(See Screen 4)*
- Dynamic reconfiguring of cascade control loops enables exceptional process flexibility.

▶Comprehensive, Real-Time Data Capture, Reporting and Trending

- The real-time data historian captures all process parameters and times, and offers accessible look-up.
- Export of data to other master data repository systems is supported with built-in functionality
- Real time alarming protects process integrity and helps avoid lost batches
- All alarms are logged to database

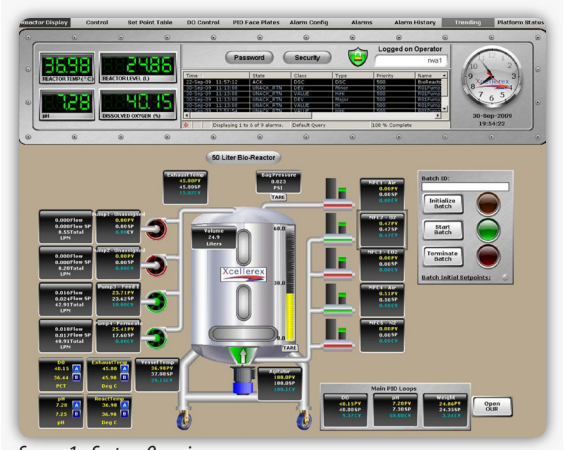

Screen 1 - System Overview

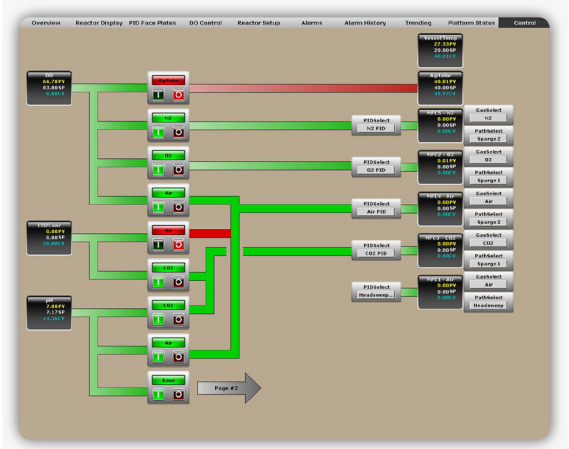

Screen 2 - Cascade Loop Control

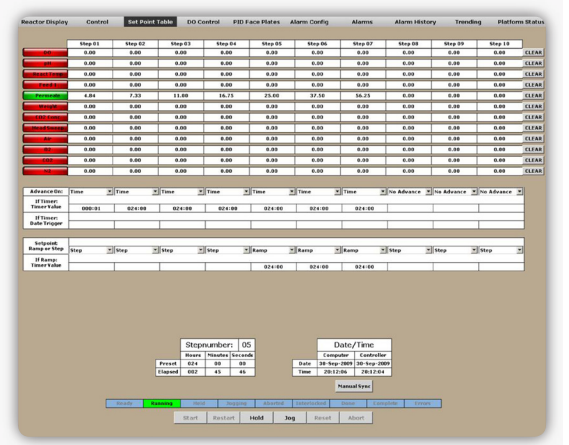

Screen 3 -Set Point Automation Tables

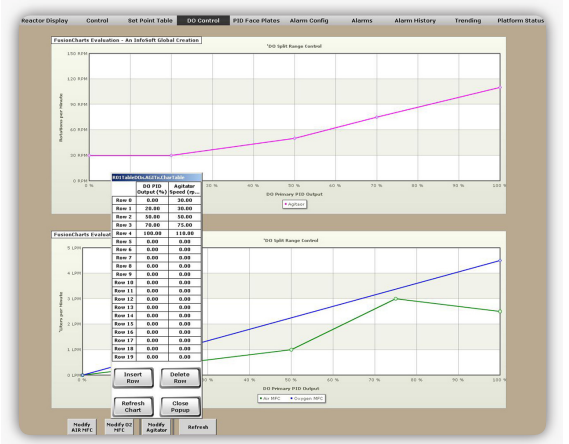

Screen 4 - DO Strategy Set-Up Screen

XDR PERFORMANCE DATA

Figures 1-3 illustrate examples of *first-run* data for a series of CHO processes, demonstrating the XDR system's ability to achieve immediate process equivalence. Additional, extensive data is available on request.

Figure 1: CHO Process - Titer Data (XDR vs. 10L Glass Reactor)

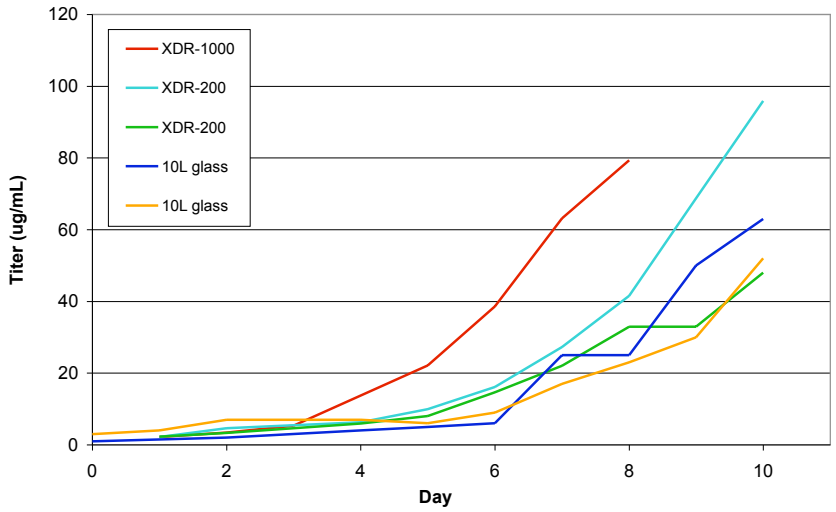

FIGURE 1: XDR achieved equivalent or better titer during scale-up from a 10 liter glass reactor to a 200 L XDR to a 1000 liter XDR.

Figure 2: CHO Process - Viability Data (XDR vs. 10L Glass Reactor)

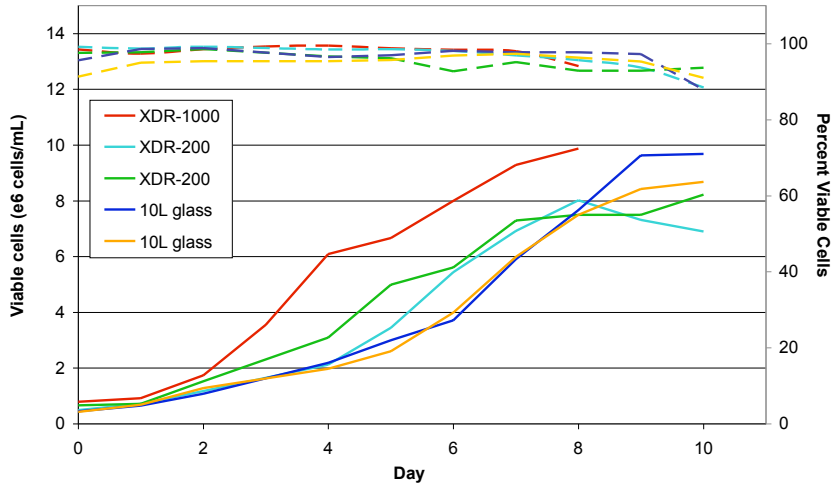

FIGURE 2: XDR achieved equivalent or better cell viability during scale-up from a 10 liter glass reactor to a 200L XDR to a 1000 liter XDR.

Figure 3: CHO Perfusion Process - Viability Data (XDR vs. 10L Glass Reactor)

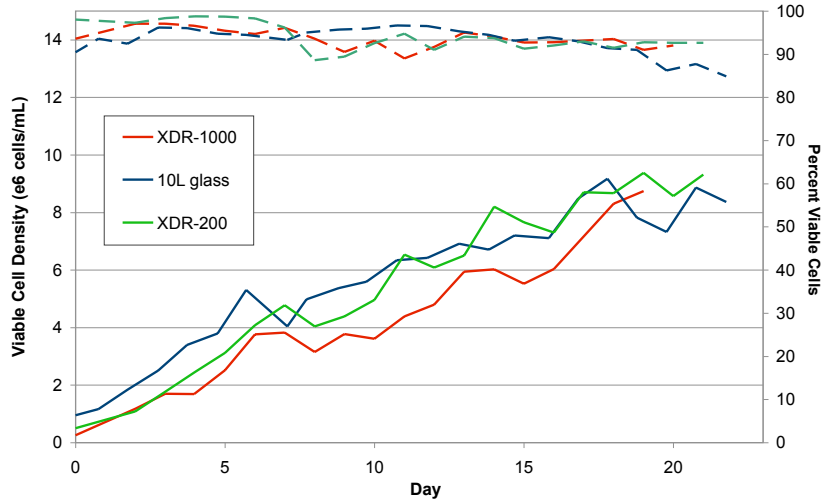

FIGURE 3: XDR achieved process equivalence for a perfusion process at the 200L and 1000L scale.

FOR ADDITIONAL INFORMATION

To learn more about XDR Single-Use Bioreactors or other Xcellerex systems or services, please contact customer service at:

Toll Free: 1-866-Xcellerex (1-866-923-5537)

Telephone: 1-508-480-9235

Email: sales@xcellerex.com

Xcellerex, Inc.
170 Locke Drive
Marlborough, MA 01752
USA

Toll Free: 1-866-Xcellerex
Tel: 508-480-9235
info@xcellerex.com
www.xcellerex.com
rev. xdr031111

Carr Centritech Separation Systems

Carr® UniFuge® Pilot

Carr Centritech's new **UniFuge®** from PneumaticScaleAngelus utilizes a gamma irradiated, single-use module that requires NO CIP and NO SIP. All process contact surfaces are easy to install and are 100% replaceable after each run. Low shear harvesting of mammalian and insect cells is possible, and minimal reduction in viability of recovered cells is achievable. Since the cells are not lysed, production of cell debris in the centrifuge is minimized, making the **UniFuge®** an excellent choice for both cell recovery or centrate clarification. **UniFuge®** modules are readily tube welded to your single-use bioreactor connections. *(Customer-specified single-use connectors available upon request.)*

The **UniFuge®** is completely automated with flexible cycle parameter entry. The feed suspension is gently pumped to the module and the cells settle to the outer radius while the clear supernatant is continuously discharged. Once the module has filled with cells, the controller stops the rotor and discharges the cells. This cycle is repeated until the bioreactor volume has been processed.

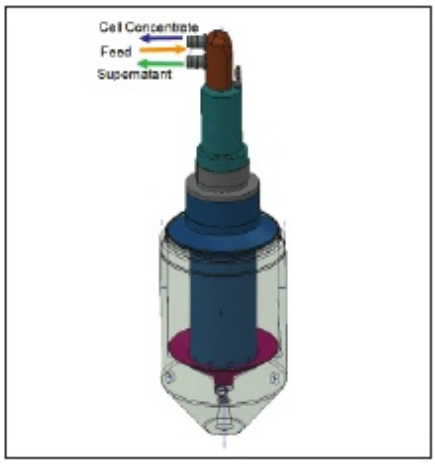

Machine Specifications

- **Utility Requirements**

Power Configurations:	US 120 VAC 15A EU 230 VAC 50 Cycle 10A

- **Construction**

Process Wetted Parts:	USP Class VI Polycarbonate USP Class VI Polyurethane USP Class VI Silicone USP Class VI Bioprene USP Class VI C-Flex USP Class VI Polypropylene Terminally Gamma Irradiated

- **Dimensions**

Cart:	53" L X 32" W X 46" H
Centrifuge:	33.5" L X 19" W X 35" H
Weight:	640 lbs. total

- **Operating Specifications**

Feed Flow Range:	0.1–4 liters per min.
Bowl Capacity:	1.6 liters

For more information, please contact your Carr Centritech representative at:

5320 140th Avenue North
Clearwater, FL 33760 USA
(727) 535-4100

Zeta Plus™ Single-Use Depth Filtration Product Portfolio

Zeta Plus™ Encapsulated System...
The System of Choice for Single-Use Depth Filtration

Features & Benefits

Ergonomically Designed Holder System:

Model# 16EZB

Large holders (Model# 16EZB and #16EZC [not shown]) can be pivoted between horizontal and vertical positions.

- Enables loading and unloading at waist height.
- Minimal fluid spills when handling spent capsules.
- Single or two-stage depth filtration within one filter holder.

Vertical flow path.

- Full utilization of the filter media.
- Small footprint during filtration.

Innovative Capsule/Manifold Design:

Translucent plastic shell (Standard Capsules).

- Easy detection of the liquid level inside, providing real time monitoring of the filtration process.

Solid core design with fully encapsulated shell.

- Eliminates the need for a stainless steel housing and the cleaning step after filtration.
- Low hold-up volume.

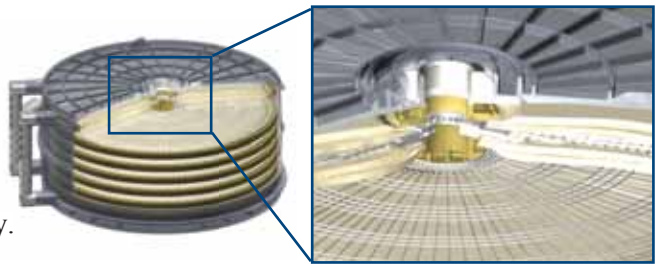

Self guiding locking mechanism.

- Fast, reliable and robust capsule-to-capsule connectivity.

Lenticular style capsule design.

- Linear scalability from small to large systems.
- Consistency between single-use and conventional depth filtration.

Zeta Plus™ filter media:

- Both double layer and single layer Zeta Plus filter media are available.
- Superior performance in throughput and filtration efficiency.

Zeta Plus™ Encapsulated Standard Capsule Offering With Polycarbonate Shells

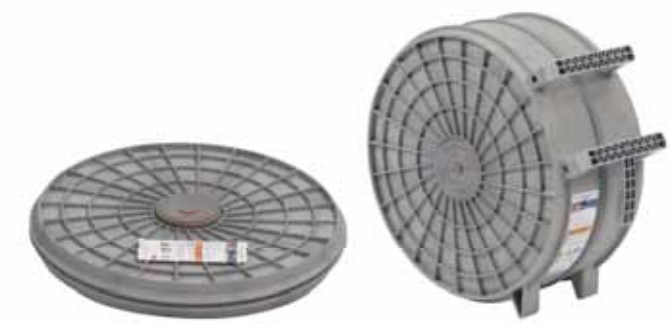

Zeta Plus™ Encapsulated Capsule Offering With Alkaline Resistant* Polyphenylene / Polystyrene Shells

The Zeta Plus™ Encapsulated System is a single-use depth filtration system designed for the bioprocessing industry where upstream cell culture clarification or downstream impurity removal is required. The Zeta Plus Encapsulated System consists of three product lines: a small system that is ideal for lab scale production or scale-up studies, and two larger systems that are designed for production scale biomanufacturing. Each system is comprised of a filter holder, top and bottom manifolds, and the required number of capsules.

The Zeta Plus Encapsulated Systems for production scale biomanufacturing feature an ergonomically designed large holder (Models# 16EZB and 16EZC) that can be pivoted between horizontal and vertical positions, allowing for convenient loading and unloading, minimal footprint during filtration, minimal fluid spills during unloading, and full utilization of the filter media.

The capsule design features a translucent plastic shell (standard capsules) for easy liquid level detection; a self guiding locking mechanism for fast and robust capsule-to-capsule connection; and the industry leading Zeta Plus depth filter media that provides superior filtration performance.

Zeta Plus™ Cartridges and Capsule Family

Self Guiding Locking Mechanism Enables Fast And Robust Capsule-To-Capsule Connection

* Based on testing with 1M NaOH and 5% NaClO (Bleach).
See Chemical Compatibility Guide (70-0202-2023-5/LITPHG03) for more information.

High Performance filter media

The Zeta Plus™ Encapsulated System utilizes the industry leading Zeta Plus depth filter media, including the double layer Zeta Plus EXT Series filter media and many popular single layer Zeta Plus filter media options including SP media and ZA media grades. The Zeta Plus EXT Series is a family of advanced dual zone depth filters designed to provide optimal clarification of bioprocess and biological fluids. Most Zeta Plus products using EXT Series filter media consist of two distinct layers, or "zones" of filter media with the upstream zone more open than the downstream one. This structure enhances the contaminant holding capacity of the filter media, reduces premature plugging and helps extend service life. All Zeta Plus EXT filter media grades are available in single-use format including a special grade (DELI08A) that is designed for lipid removal.

Applications

- Clarification of mammalian cell culture harvest.
- Enhanced protection of downstream processes.
- Clarification of bacteria, yeast and insect cell lysates.
- Host Cell Proteins (HCP) removal.
- Viruses and DNA reduction.
- Protein aggregates removal.
- Endotoxin removal.
- Anti-foaming agents removal.

Table 1a. Recommended Operating Parameters

	Zeta Plus™ Encapsulated System	Zeta Plus™ Scale-Up Capsules
Maximum Operating Pressure Inlet Pressure Differential Pressure	3.4 bar (50 psi) 2.4 bar (35 psi)	3.1 bar (45 psi) 35 psi (2.4 bar)
Maximum Operating Temperature	40°C (104°F)	
Recommended Pre-use Rinse	54 L/m² (1.3 gal/ft²)	

The primary application for the Zeta Plus Encapsulated System is cell culture clarification after fermentation. The System can be employed alone, or in combination with centrifugation or Tangential Flow Filtration (TFF). An alternative application for the Zeta Plus Encapsulated System is downstream impurity removal. Taking advantage of its positive charge capacity, Zeta Plus filter media has been shown to be effective in removing contaminants such as host cell proteins (HCP), viruses, DNA, protein aggregates, and endotoxins.

In monoclonal antibody production, Zeta Plus filter media is increasingly being used as a polishing step after the Protein A column capture step, replacing traditional anion exchange chromatography.

Ergonomically Designed Filter Holders

Traditional depth filtration systems utilize lenticular style cartridge filters and a vertical filtration flow path to allow easy access to process liquids and efficient utilization of filter media. However, stacking cartridges from bottom to top can be cumbersome and dismantling the spent cartridges is often labor intensive. Furthermore, fluid spills during the unloading process could be problematic and, in some instances, might expose the operators to the process fluids.

Figure 1. Zeta Plus™ Encapsulated System

EZ16A

EZ16B

EZ16C

Recognizing the need for a depth filtration system that is fast, easy and clean, 3M designed filter holders (Model# 16EZB and #16EZC) that can be pivoted between the horizontal position for loading and unloading the capsules and manifolds, and the vertical position for filtration. Allowing loading and unloading at waist height eliminates the need for operators to lift capsules above their heads and reduces the risk of fluid spills when handling spent capsules. The use of the vertical flow path allows for full media utilization and a small system footprint during filtration.

Small Holder (Model# 16EZA)

The small holder is available for scale-up studies and lab scale protein production. This holder can accommodate from one to four 0.23 m² capsules, or one 1.6 m² (double layer) or 2.5 m² (single layer) capsule. Either single stage or two-stage depth filtration can be performed within the same holder. The standard small holder has a built-in torque limiter that will signal the operator when the holder assembly is properly sealed. A modified version is available that is ideal for applications where autoclaving is required.

Large Holder (Model# 16EZB)

The large holder can accommodate up to 17.5 m² of single layer Zeta Plus filter media (or 11.2 m² of double layer Zeta Plus filter media), and is ideal for small to large production scale purification processes.

Multi-Round Holder (Model# 16EZC)

The Multi-Round Holder incorporates multiple carousels to allow for additional filtration area for larger scale applications. Movement of the carousel from the horizontal load position to the vertical filtration position is done via automation. The Multi-Round Holder can be adapted to meet the specific needs of large-scale biomanufacturers. For more information, please contact your 3M Purification representative.

Innovative Capsule/Manifold Design

Two capsule configurations are available for use with the Zeta Plus™ Encapsulated System. The small capsule is designed for use with the small holder in lab scale production and scale-up studies. It has 0.23 m² filtration area and it accommodates both double layer and single layer Zeta Plus filter media. The large capsule is designed for use with both the small and large holders. It accommodates 1.6 m² double layer media or 2.5 m² single layer media. The large capsule has a self guiding locking mechanism for a fast, easy, and robust capsule-to-capsule connection, and a solid core design that eliminates the need for stainless steel bands and center post. In addition, this capsule also has two handles for convenient loading and unloading, and a low capsule fill volume and post-blown down hold-up volume. The capsule plastic shells are available in two different materials for a broad range of applications. The standard capsules use polycarbonate, thus have the translucent plastic shells that enables easy liquid level detection. The alkaline resistant* capsules use polyphenylene/polystyrene, and can be used in applications where NaOH is required either before or after filtration. Correspondingly, the single use top and bottom manifolds are also available in these two materials. The manifold set ensures the entire filtration process is fast, easy, and clean. An extra pair of manifolds is required to perform two-stage filtration within one holder assembly.

Top Manifold | **Bottom Manifold** | **Small Capsule** 0.23 m² Capsule (with double layer or single layer media) | **Large Capsule** 1.6 m² Capsule (with double layer media) 2.5 m² Capsule (with single layer media)

Figure 2. Nominal Retention Ratings for Zeta Plus™ EXT Grades
(For reference only. Retention ratings may vary depending on application.)

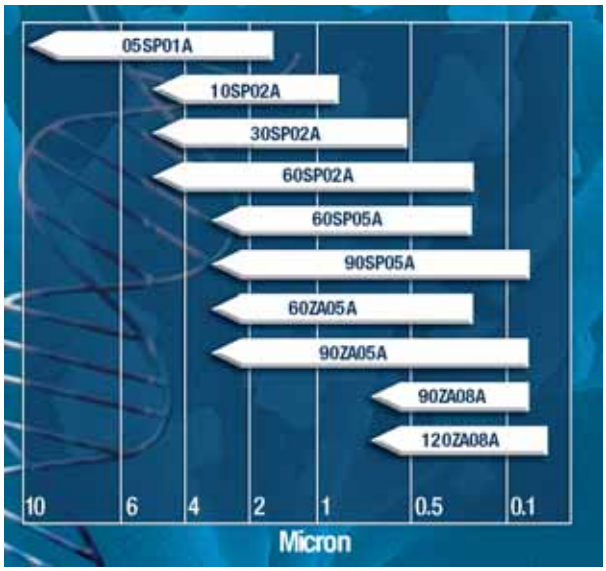

* Based on testing with 1M NaOH and 5% NaClO (Bleach). See Chemical Compatibility Guide (70-0202-2023-5/ LITPHG03) for more information.

Figure 3. The Zeta Plus™ Encapsulated System Single-Use Depth Filtration Product Portfolio

Scalability

The Zeta Plus™ Encapsulated System retains the lenticular filter design and vertical flow path that are characteristics of traditional depth filtration systems, helping ensure consistent performance from bench scale to production scale, and from traditional non-disposable to disposable systems.

Four disposable scale-up devices are available for media grade selection and filter sizing. The BC25 capsule with 25 cm² filter media is ideal for media grade screening. The scale-up capsule filters with 170 cm², 340 cm² and 1020 cm² media are designed for intermediate scale-up studies and lab scale protein production. Combined with these small scale devices, the Zeta Plus Encapsulated System offers a completely single-use solution to process from 0.5 L to 2500+ L of liquid.

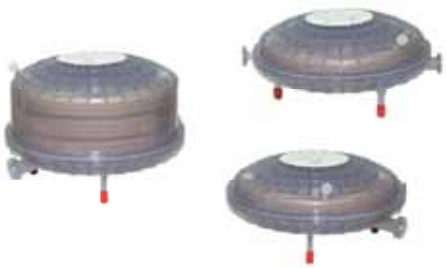

Figure 4. Zeta Plus™ Scale-Up Capsules

Figure 5. Large Holder with Mechanical Polish Finish

Figure 6. Multi-Round System

Table 2a. Zeta Plus™ Encapsulated System Capsule Filter and Manifold Specifications

		Configuration			
		Small Capsule		Large Capsule	
		Standard	Alkaline Resistant[1]	Standard	Alkaline Resistant[1]
Dimensions (Height x Diameter)		5.7 cm x 45.2 cm (2.2" x 17.8")		20.3 cm x 45.2 cm (8.0" x 17.8")	
Weight					
Dry		3.3 kg (7 lbs)	3.4 kg (8 lbs)	10.0 kg (22 lbs)	10.7 kg (24 lbs)
Wet (post Blow-Down)		4.4 kg (10 lbs)	4.8 kg (11 lbs)	19.3 kg (43 lbs)	19.7 kg (43 lbs)
Materials of Construction					
filter media		Filter aids, cellulose, binding resin		Filter aids, cellulose, binding resin	
Outer Shell		Polycarbonate	Polyphenylene / Polystyrene	Polycarbonate	Polyphenylene / Polystyrene
O-rings		Silicone		Silicone	
Separators, Spacers and Connectors		Polypropylene		Polypropylene	
Edge Seals		Thermoplastic Elastomer		Thermoplastic Elastomer	
Handles		N/A		Nylon	
Hold-up Volume					
Capsule Fill Volume[2]	Double Layer:	~ 1.1 L (~ 0.3 gal)		~ 5.2 L (~ 1.4 gal)	
	Single Layer:	~ 2.6 L (~ 0.7 gal)		~ 4.2 L (~1 .1 gal)	
Post Blow-Down Hold-up Volume[3]		< 100 mL (<0.026 gal)		< 100 mL (<0.026 gal)	
Maximum Operating Line Pressure		3.4 bar (50 psig)		3.4 bar (50 psig)	
Maximum Differential Pressure					
Forward		2.4 bar (35 psid)		2.4 bar (35 psid)	
Sterilization		1 cycle autoclave (30 mins) at 126°C (259°F)		1 cycle autoclave (30 mins) at 126°C (259°F)	
Effective Filtration Area		0.23 m² (2.4 ft²)		Double layer: 1.6 m² (17.2 ft²) Single layer: 2.5 m² (27.0 ft²)	
Top/Bottom Manifold					
Dimensions (Height x Diameter)		5.2 cm x 45.2 cm (2.0" x 17.8")		5.2 cm x 45.2 cm (2.0" x 17.8")	
Connector		1.5" Sanitary Style		1.5" Sanitary Style	
Material		Polycarbonate	Polyphenylene / Polystyrene	Polycarbonate	Polyphenylene / Polystyrene
Weight		4.5 kg (10 lbs)	4.5 kg (10 lbs)	4.5 kg (10 lbs)	4.5 kg (10 lbs)
Hold up volume		< 250 mL (<0.07 gal)		< 250 mL (<0.07 gal)	

[1] Based on testing with 1M NaOH and 5% NaClO (Bleach). See Chemical Compatibility Guide (70-0202-2023-5/LITPHG03) for more information.
[2] Capsule Fill Volume is defined as the volume of liquid that is required to fill the portion of the capsule outside the filter media.
[3] Post Blow-Down Hold-up Volume is defined as the volume of the residual liquid after nitrogen gas blow-down.

Figure 7. Single-Use Manifolds and Capsule Filter Schematic

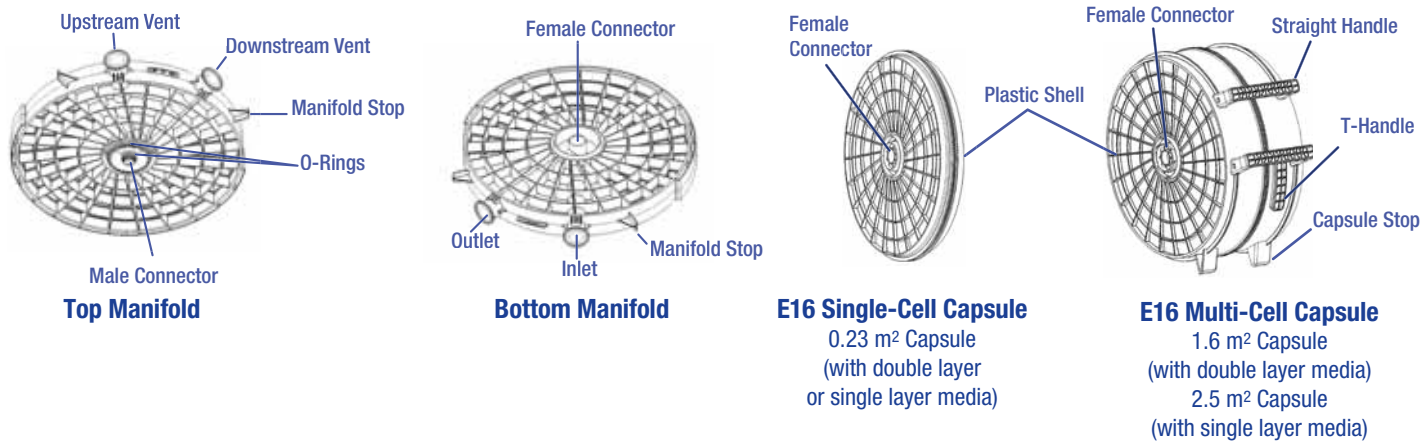

Table 2b: Zeta Plus Scale-Up Capsule Filter Specifications

	170 cm² Capsule	340 cm² Capsule	1020 cm² Capsule
Dimensions			
Height x Diameter	4.1” x 8.5” (10.3 cm x 21.6 cm)		6.0” x 8.5” (15.2 cm x 21.6 cm)
Weight			
Dry - Single Layer	1.0 kg (2.2 lb)	1.0 kg (2.1 lb)	1.4 kg (3.0 lb)
Dry - Double Layer	1.0 kg (2.2 lb)	1.0 kg (2.3 lb)	1.6 kg (3.5 lb)
Wet Post Blow-Down - Single Layer	1.1 kg (2.4 lb)	1.1 kg (2.5 lb)	1.8 kg (4.0 lb)
Wet Post Blow-Down - Double Layer	1.2 kg (2.6 lb)	1.3 kg (2.9 lb)	2.4 kg (5.2 lb)
Materials of Construction			
Capsule Shells	Polysulfone		
Separator, Spacer, Vent Cap	Polypropylene		
O-ring	Fluorocarbon		
Endcap & Edge Seals	Thermoplastic Elastomer		
Volume			
Capsule[1] Fill Volume - Single Layer	0.48 L	0.40 L	0.91 L
Capsule[1] Fill Volume - Double Layer	0.43 L	0.34 L	0.62 L
Post[2] Blow-Down Hold-up Volume - Single Layer	< 40 mL	< 40 mL	< 40 mL
Post[2] Blow-Down Hold-up Volume - Double Layer	< 40 mL	< 40 mL	< 40 mL
Miscellaneous			
Sterilization	1 cycle autoclave (30 min) @ 126°C (259°F)		
Effective Filtration Area	170 cm² (0.18 ft²)	340 cm² (0.37 ft²)	1,020 cm² (1.10 ft²)
Connector	1/2” Sanitary Style		

[1] Capsule Fill Volume is defined as the volume of liquid that is required to fill the portion of the capsule outside the filter media.

[2] Post Blow-Down Hold-up Volume is defined as the volume of the residual liquid after nitrogen gas blow-down.

IMPORTANT NOTICE: Always operate the filter system within the maximum differential pressure of 2.4 bar (35 psig).

Figure 8. Scale-Up Capsule Filter Schematics

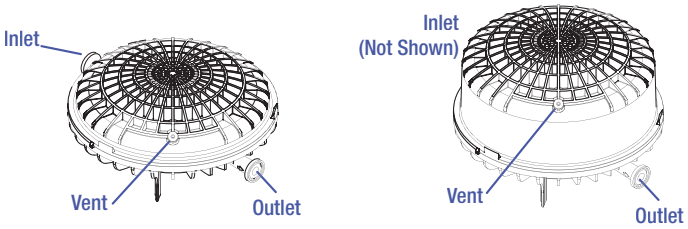

170 cm² & 340 cm² Capsules

1020 cm² Capsule

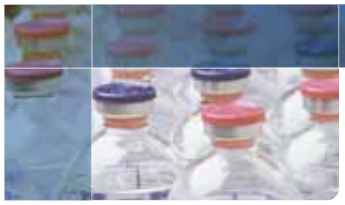

Table 3. Zeta Plus™ Encapsulated System Holder Specifications

	Holder Model		
	Small Holder (Model# 16EZA)	Large Holder (Model# 16EZB)	Multi-Round Holder (Model# 16EZC)
Maximum Operating Pressure	3.4 bar (50 psi)	3.4 bar (50 psi)	3.4 bar (50 psi)
Materials of Construction			
Frame	304 Stainless Steel	304 Stainless Steel	Please contact your 3M Purification representative for details.
End Plates	304 Stainless Steel	304 Stainless Steel	
Support Rods	440 Stainless Steel	316 Stainless Steel	
Stand	304 Stainless Steel	304 Stainless Steel	
Hand Wheels	300 Series Stainless Steel	300 Series Stainless Steel	
Gear Box	N/A	Epoxy Coated Cast Iron Cover	
Locking Bar	N/A	304 Stainless Steel	
Casters	Stainless Steel	Stainless Steel	N/A
Wheels	Phenolic	Polyurethane	
Surface Finish			
Standard	Satin Glass Bead Finish (4814901 and 4815501)	Mechanical Polish Finish (6123502)	Please contact your 3M Purification representative for details.
Special	Electropolish Finish (4814902)	N/A	

Table 4. Zeta Plus™ Encapsulated System Holder Capacity

Model	Single Stage		Two Stage	
	E16 Single-Cell Capsule	E16 Multi-Cell Capsule	E16 Single-Cell Capsule	E16 Multi-Cell Capsule
16EZA	4	1	2	NA
16EZB	NA	7	NA	6

Figure 9. Small Holder (Model# 16EZA) Dimensions

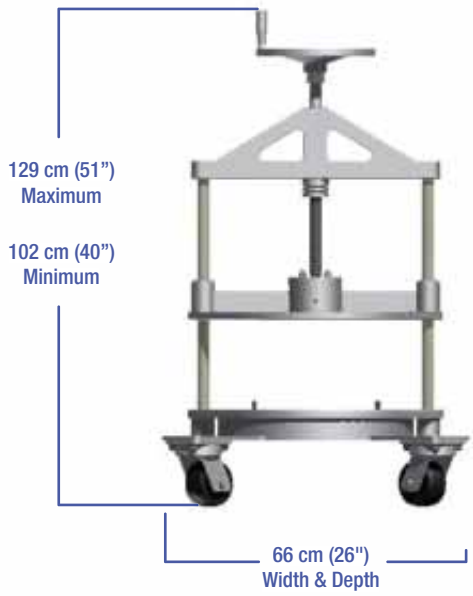

Figure 10. Large Holder (Model# 16EZB) Dimensions

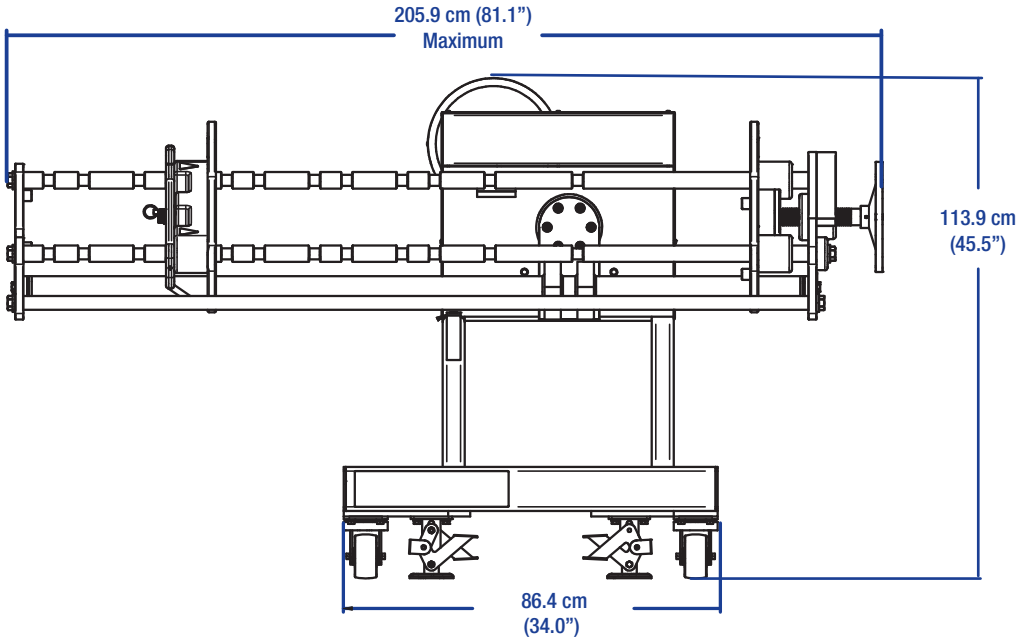

Horizontal Position

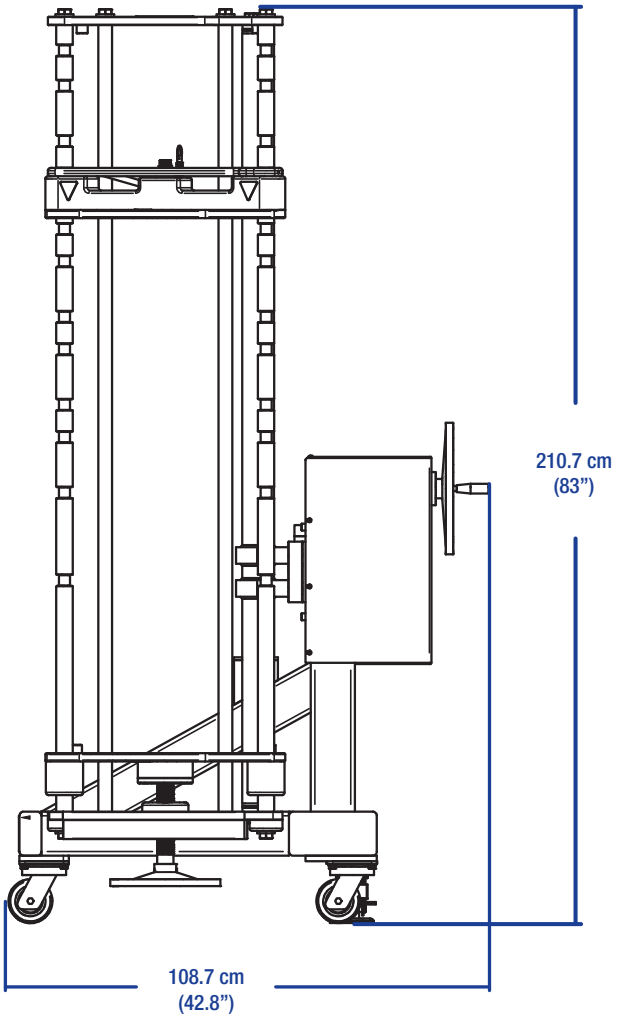

Vertical Position

Ordering Guide

Capsule Filter Ordering Information - Double layer (U.S. Customers)

Catalog Number	Configuration	Number of Cells	Gasket Material	Grade			
E16	**E** - Standard **R** - Alkaline Resistant*	**01** - 1 Cell **07** - 7 Cell	**A** - Silicone	05SP01A 10SP01A 10SP02A 30SP02A 30SP03A 60SP01A	60SP02A 60SP03A 60SP05A 90SP05A 90SP08A	120ZA05A 120ZA08A 120ZA10A 60ZA05A 90ZA05A 90ZA08A	DELI08A

NOTES:
1. All Zeta Plus™ EXT media grades are available for order.
2. For further information regarding Zeta Plus EXT Series filter media, please reference 3M Purification Literature 70-0201-8862-2 (LITZPMEXT) or 70-0201-8863-0 (LITZPMEXTSP1) and Chemical Compatibility Guide 70-0202-2023-5 (LITPHG03)
3. DELI08A is a Zeta Plus EXT grade with two single layers of Delipid (DELI) media.
4. Single layer 05SP media is offered in 0.23 m² and 1.6 m² Capsule format. One part number example is E16E07A05SP.

Capsule Filter Ordering Information - Single layer (U.S. Customers)

Catalog Number	Configuration	Number of Cells	Gasket Material	Grade			
E16	**E** - Standard **R** - Alkaline Resistant*	**01** - 1 Cell **11** - 11 Cell	A - Silicone	30LA 50LA 60LA 90LA	30LP 50LP 60LP 90LP	10SP 30SP 50SP 60SP 90SP	30ZA 60ZA 90ZA DELI

Manifold Ordering Information

Manifold Part	3M PI Part Number	3M ID
Manifold Set (Standard)	6128901	70020256221
Manifold Set (Alkaline Resistant*)	6129001	70020262369

Filter Holder Ordering Information

Model Name	3M Catalog ID (U.S. Customers)	Description	3M ID
16EZA	4814901	Standard Small Holder	70020233048
16EZA	4814902	Small Holder with Electropolish Finish	70020253889
16EZA	4815501	Modified Small Holder Suitable for Autoclaving	70020236512

Model Name	3M Catalog ID (U.S. Customers)	Description	3M ID
16EZB	6123502	Large Holder with Mechanical Polish Finish	70020252899

Scale-Up Capsules - Double Layer

3M Catalog ID (U.S. Customers)	EFA cm²	Material Code	Grade		
E	0170 0340 1020	FSA	05SP01A 10SP01A 10SP02A 30SP02A 30SP03A 60SP01A 60SP02A 60SP03A 60SP05A 90SP05A 90SP08A	60ZA05A 90ZA05A 90ZA08A 120ZA05A 120ZA08A 120ZA10A	DELI08A DELP08A

Scale-Up Capsules - Single Layer

3M Catalog ID (U.S. Customers)	EFA cm²	Material Code	Grade			
E	0170 0340 1020	FSA	05SP 10SP 30SP 50SP 60SP 90SP	30LA 50LA 60LA 90LA	30LP 50LP 60LP 90LP	30ZA 60ZA 90ZA DELI

* Based on testing with 1M NaOH and 5% NaClO (Bleach). See Chemical Compatibility Guide (70-0202-2023-5/LITPHG03) for more information.

Capsule 3M ID Numbers for International Customers

Standard Zeta Plus™ Encapsulated System Capsule Filters

3M Catalog ID (U.S. Customers)	3M ID (International Customers)	(U.S. Customers)	3M ID (International Customers)
E16E01A05SP	70020288414	E16E07A05SP	70020288562
E16E01A05SP01A	70020239011	E16E07A05SP01A	70020236918
E16E01A10SP	70020288422	E16E07A10SP02A	70020236561
E16E01A10SP02A	70020239029	E16E07A120ZA08A	70020236926
E16E01A120ZA08A	70020238526	E16E07A30SP02A	70020236942
E16E01A30LA	70020288430	E16E07A60SP02A	70020236603
E16E01A30LP	70020288448	E16E07A60SP05A	70020236959
E16E01A30SP	70020288455	E16E07A60ZA05A	70020236967
E16E01A30SP02A	70020238534	E16E07A90SP05A	70020236629
E16E01A30ZA	70020288364	E16E07A90ZA05A	70020236975
E16E01A50LA	70020288471	E16E07A90ZA08A	70020236983
E16E01A50LP	70020288489	E16E11A10SP	70020288596
E16E01A50SP	70020274430	E16E11A30LA	70020288604
E16E01A60LA	70020288497	E16E11A30LP	70020288612
E16E01A60LP	70020288505	E16E11A30SP	70020288620
E16E01A60SP	70020288513	E16E11A30ZA	70020288638
E16E01A60SP02A	70020239078	E16E11A50LA	70020288646
E16E01A60SP05A	70020239094	E16E11A50LP	70020288653
E16E01A60ZA	70020283605	E16E11A50SP	70020288661
E16E01A60ZA05A	70020238542	E16E11A60LA	70020288679
E16E01A90LA	70020288521	E16E11A60LP	70020288687
E16E01A90LP	70020288539	E16E11A60SP	70020288695
E16E01A90SP	70020288547	E16E11A60ZA	70020288703
E16E01A90SP05A	70020239102	E16E11A90LA	70020288711
E16E01A90ZA	70020288356	E16E11A90LP	70020288729
E16E01A90ZA05A	70020239128	E16E11A90SP	70020288737
E16E01A90ZA08A	70020238559	E16E11A90ZA	70020288745
E16E01ADELI	70020256130	E16E11ADELI	70020288588

Alkaline Resistant Zeta Plus™ Encapsulated System Capsule Filters*

3M Catalog ID (U.S. Customers)	3M ID (International Customers)	(U.S. Customers)	3M ID (International Customers)
E16R01A05SP	70020288992	E16R07A05SP	70020289008
E16R01A05SP01A	70020262609	E16R07A05SP01A	70020262740
E16R01A10SP	70020288794	E16R07A10SP02A	70020262757
E16R01A10SP02A	70020262625	E16R07A120ZA08A	70020262773
E16R01A120ZA08A	70020262641	E16R07A30SP02A	70020262799
E16R01A30LA	70020288802	E16R07A60SP02A	70020262823
E16R01A30LP	70020288810	E16R07A60SP05A	70020262849
E16R01A30SP	70020288828	E16R07A60ZA05A	70020262856
E16R01A30SP02A	70020262948	E16R07A90SP05A	70020262864
E16R01A30ZA	70020288364	E16R07A90ZA05A	70020262880
E16R01A50LA	70020288836	E16R07A90ZA08A	70020262898
E16R01A50LP	70020288844	E16R11A10SP	70020289024
E16R01A50SP	70020288851	E16R11A30LA	70020289032
E16R01A60LA	70020288869	E16R11A30LP	70020289040
E16R01A60LP	70020288877	E16R11A30SP	70020289057
E16R01A60SP	70020288885	E16R11A30ZA	70020289065
E16R01A60SP02A	70020262682	E16R11A50LA	70020289073
E16R01A60SP05A	70020262955	E16R11A50LP	70020289081
E16R01A60ZA	70020284587	E16R11A50SP	70020289099
E16R01A60ZA05A	70020262708	E16R11A60LA	70020289107
E16R01A90LA	70020288893	E16R11A60LP	70020289115
E16R01A90LP	70020288901	E16R11A60SP	70020289123
E16R01A90SP	70020288919	E16R11A60ZA	70020289131
E16R01A90SP05A	70020262716	E16R11A90LA	70020289149
E16R01A90ZA	70020288927	E16R11A90LP	70020289156
E16R01A90ZA05A	70020262963	E16R11A90SP	70020289164
E16R01A90ZA08A	70020262732	E16R11A90ZA	70020289172
E16R01ADELI	70020288786	E16R11ADELI	70020289016

Zeta Plus™ ScaleUp Capsule 3M ID Numbers

3M Catalog ID (U.S. Customers)	3M ID (International Customers)
E0170FSA05SP01A	70020290170
E0170FSA10SP01A	70020290196
E0170FSA10SP02A	70020290204
E0170FSA30SP02A	70020290279
E0170FSA30SP03A	70020290287
E0170FSA60SP01A	70020290360
E0170FSA60SP02A	70020290378
E0170FSA60SP03A	70020290386
E0170FSA60SP05A	70020290394
E0170FSA90SP05A	70020290451
E0170FSA90SP08A	70020290469
E0170FSA60ZA05A	70020290410
E0170FSA90ZA05A	70020290485
E0170FSA90ZA08A	70020290493
E0170FSA120ZA05A	70020290212
E0170FSA120ZA08A	70020290220
E0170FSA120ZA10A	70020290238
E0170FSADELI08A	70020290147
E0170FSADELP08A	70020290154
E0170FSA05SP	70020290162
E0170FSA10SP	70020290188
E0170FSA30SP	70020290261
E0170FSA50SP	70020290329
E0170FSA60SP	70020290352
E0170FSA90SP	70020290444
E0170FSA30ZA	70020290295
E0170FSA60ZA	70020290402
E0170FSA90ZA	70020290477
E0170FSA30LA	70020290246
E0170FSA50LA	70020290303
E0170FSA60LA	70020290337
E0170FSA90LA	70020290428
E0170FSA30LP	70020290253
E0170FSA50LP	70020290311
E0170FSA60LP	70020290345
E0170FSA90LP	70020290436
E0170FSADELI	70020290139

3M Catalog ID (U.S. Customers)	3M ID (International Customers)
E0340FSA05SP01A	70020290543
E0340FSA10SP01A	70020290568
E0340FSA10SP02A	70020290576
E0340FSA30SP02A	70020290642
E0340FSA30SP03A	70020290659
E0340FSA60SP01A	70020290733
E0340FSA60SP02A	70020290741
E0340FSA60SP03A	70020290758
E0340FSA60SP05A	70020290766
E0340FSA90SP05A	70020290824
E0340FSA90SP08A	70020290832
E0340FSA60ZA05A	70020290782
E0340FSA90ZA05A	70020290857
E0340FSA90ZA08A	70020290865
E0340FSA120ZA05A	70020290584
E0340FSA120ZA08A	70020290592
E0340FSA120ZA10A	70020290600
E0340FSADELI08A	70020290519
E0340FSADELP08A	70020290527
E0340FSA05SP	70020290535
E0340FSA10SP	70020290550
E0340FSA30SP	70020290634
E0340FSA50SP	70020290691
E0340FSA60SP	70020290725
E0340FSA90SP	70020290816
E0340FSA30ZA	70020290667
E0340FSA60ZA	70020290774
E0340FSA90ZA	70020290840
E0340FSA30LA	70020290618
E0340FSA50LA	70020290675
E0340FSA60LA	70020290709
E0340FSA90LA	70020290790
E0340FSA30LP	70020290626
E0340FSA50LP	70020290683
E0340FSA60LP	70020290717
E0340FSA90LP	70020290808
E0340FSADELI	70020290501

3M Catalog ID (U.S. Customers)	3M ID (International Customers)
E1020FSA05SP01A	70020290915
E1020FSA10SP01A	70020290931
E1020FSA10SP02A	70020290949
E1020FSA30SP02A	70020291012
E1020FSA30SP03A	70020291020
E1020FSA60SP01A	70020291103
E1020FSA60SP02A	70020291111
E1020FSA60SP03A	70020291129
E1020FSA60SP05A	70020291137
E1020FSA90SP05A	70020291194
E1020FSA90SP08A	70020291202
E1020FSA60ZA05A	70020291152
E1020FSA90ZA05A	70020291228
E1020FSA90ZA08A	70020291236
E1020FSA120ZA05A	70020290956
E1020FSA120ZA08A	70020290964
E1020FSA120ZA10A	70020290972
E1020FSADELI08A	70020290881
E1020FSADELP08A	70020290899
E1020FSA05SP	70020290907
E1020FSA10SP	70020290923
E1020FSA30SP	70020291004
E1020FSA50SP	70020291061
E1020FSA60SP	70020291095
E1020FSA90SP	70020291186
E1020FSA30ZA	70020291038
E1020FSA60ZA	70020291145
E1020FSA90ZA	70020291210
E1020FSA30LA	70020290980
E1020FSA50LA	70020291046
E1020FSA60LA	70020291079
E1020FSA90LA	70020291160
E1020FSA30LP	70020290998
E1020FSA50LP	70020291053
E1020FSA60LP	70020291087
E1020FSA90LP	70020291178
E1020FSADELI	70020290873

Enabling SCALABILITY for Cell Culture Clarification from R&D to **Large-Scale Production**

Zeta Plus™ Encapsulated Depth Filter Platform

Lab / R&D	Scale-Up	Pilot Production	Large Scale Production	Multi-Round Production
Up to 1 Liter	Up to 50 Liters	Up to 400 Liters	Up to 5,000 Liters	Up to 25,000 Liters

Important Notice

The information described in this literature is accurate to the best of our knowledge. A variety of factors, however, can affect the performance of the Product(s) in a particular application, some of which are uniquely within your knowledge and control. **INFORMATION IS SUPPLIED UPON THE CONDITION THAT THE PERSONS RECEIVING THE SAME WILL MAKE THEIR OWN DETERMINATION AS TO ITS SUITABILITY FOR THEIR USE. IN NO EVENT WILL 3M PURIFICATION INC. BE RESPONSIBLE FOR DAMAGES OF ANY NATURE WHATSOEVER RESULTING FROM THE USE OF OR RELIANCE UPON INFORMATION.**

It is your responsibility to determine if additional testing or information is required and if this product is fit for a particular purpose and suitable in your specific application.

3M PURIFICATION INC. MAKES NO REPRESENTATIONS OR WARRANTIES, EITHER EXPRESS OR IMPLIED INCLUDING WITHOUT LIMITATION ANY WARRANTIES OF MERCHANTABILITY, FITNESS FOR A PARTICULAR PURPOSE OR OF ANY OTHER NATURE HEREUNDER WITH RESPECT TO INFORMATION OR THE PRODUCT TO WHICH INFORMATION REFERS.

Limitation of Liability

3M Purification Inc. will not be liable for any loss or damage arising from the use of the Product(s), whether direct, indirect, special, incidental, or consequential, regardless of the legal theory asserted, including warranty, contract, negligence or strict liability. Some states do not allow the exclusion or limitation of incidental or consequential damages, so the above limitation may not apply to you.

Your Local Distributor:

3M Purification Inc.
400 Research Parkway
Meriden, CT 06450
U.S.A.
(800) 243-6894
(203) 237-5541
Fax (203) 630-4530
www.3Mpurification.com

3M is a trademark of 3M Company.
Zeta Plus is a trademark of
3M Company used under license.
© 3M 2012. All rights reserved.
70020239672
REV 0812

“Shell and Tube Heat Exchange Fundamentals, Design and Case Studies”

by Kirk R. Novak, Krishnan Ramanathan, Tom Steen,
and Nick Ziembo, Enerquip, LLC

ABSTRACT:

As companies examine their total cost of operations, energy usage and heat recovery deliver cost savings through increased energy utilization and efficiency. Heat exchangers offer companies the opportunity to reuse energy generated for a specific purpose instead of venting that energy to the atmosphere. Shell and tube heat exchangers are in wide use throughout the Food, Dairy, Beverage, Pharmaceutical, Chemicals, Petroleum Refining, and Utility industries. This paper briefly explores three modes of heat transfer and basic designs found in shell and tube heat exchangers. Also included are several case studies from different industries where Enerquip’s heat exchangers have saved the operators energy and money.

Enerquip, LLC – 611 North Road, Medford, WI 54451. Copyright 6/11/2010. All rights reserved.

TABLE OF CONTENTS

1. BASIC MODES OF HEAT TRANSFER Page 3
    a. Heat Transfer by Conduction
    b. Heat Transfer by Convection
    c. Heat Transfer by Radiation
    d. Example Problem #1

2. SHELL AND TUBE HEAT EXCHANGERS Page 9
    a. Example Problem #2
    b. TEMA Shell and Tube Heat Exchanger Nomenclature

3. CASE STUDIES Page 15
    a. Potato Chip Fryer
    b. Pulp Plant Oil
    c. Cereal Sugar Concentrator

4. APPENDIX A – Glossary of Heat Exchanger Terminology Page 18

Enerquip, LLC - Copyright 6/11/2010. All rights reserved.

BASIC MODES OF HEAT TRANSFER

Heat transfer occurs when a temperature gradient exists within a system. Thermodynamics states that energy cannot be created or destroyed, only transformed from one state to another and transferred between different media. In basic heat exchange, there are three modes of heat transfer: conduction, convection and radiation. One or more of these conditions may occur simultaneously. Following are brief descriptions, mathematical equations of these different modes of heat transfer and a sample problem.

HEAT TRANSFER BY CONDUCTION

Heat transfer by conduction occurs when a temperature gradient exists between different media across a defined boundary. This mode of heat transfer is sustained by diffusion at the atomic and molecular levels due through the interaction of particles at different energy levels. Kinetic energy (energy of motion) transfer during these collisions is perceived as changes in temperature or the flow of heat.

Conduction may be observed in all states of matter (solids, liquids, and gases). Due to the mean free path or the spacing between the molecules in these three states, the extent of conductive heat transfer is most pronounced in tightly spaced solids and then liquids. Gases have the lowest level of conductive heat transfer.

A pot of boiling water on an electric hot plate illustrates conduction heat transfer. Heat is conducted from the hot plate to the pot placed on it (solid to solid conduction). The heated pot in turn transfers heat to the water in contact with it (solid to liquid conduction).

Fourier's law quantifies the process of heat conduction. It is based on the observed phenomenon that the rate of heat conduction is directly proportional to the temperature difference between the two media and surface area, and, indirectly proportional to the thickness of the material. It is expressed as:

$$Q = k \cdot A \cdot (dT / dx)$$

Where,

Q = rate of heat transfer (Btu/h)
k = thermal conductivity (Btu/ft-hr-°F)
A = surface area (ft^2)
dT = temperature difference (°F),
dx = thickness (ft)
(dT / dx) = the temperature gradient.

HEAT TRANSFER BY CONVECTION

Heat transfer by convection occurs by two coupled mechanisms: interaction of particles at the microscopic level and bulk motion of particles at the macroscopic level when a temperature differential exists. This mode of heat transfer is observed in liquids and gases because movement is very restricted in solids. The bulk transport of particles is the predominant mechanism compared to the diffusive transfer of energy which is only present close to the boundary of a solid surface in contact with the fluid.

The characteristic macroscopic movement observed in convective heat transfer may be caused by an external agency (forced convection), due to the inherent buoyancy forces (free or natural

Enerquip, LLC - Copyright 6/11/2010. All rights reserved.

convection), or a combination of both (mixed convection). A special case of convection is the transfer of latent energy during change of phase in processes like boiling, evaporation, and condensation.

Heating water in a pot on an electric hot plate also serves to illustrate the concept of convection. When heat is conducted from the hot plate to the pot and then to the water, the density difference between the hot and the cold water increases the buoyancy of the hot water and induces movements at the macroscopic level, forming convection currents and heating the water within the pot.

The rate of heat transfer by convection is quantitatively expressed by Newton's empirical law of cooling, which states that the rate of heat transfer is directly related to the temperature difference and the surface area. It is expressed in the general form as:

$$Q = h \cdot A \cdot (T_s - T_\infty)$$

Where,

Q = rate of heat transfer (Btu/h)
h = heat transfer coefficient (Btu/ft^2-^{o}F)
A= surface area (ft^2)
T_s = temperature of the surface (^{o}F)
T_∞ = temperature of the fluid (^{o}F).

The heat transfer coefficient is a function of thermodynamic, transport, and geometrical parameters.

HEAT TRANSFER BY RADIATION

All materials, solids, liquids, and gases, emit thermal radiation in the form of electromagnetic waves when they are at a temperature above absolute zero (~ -459.67 ^{o}F). When they interact with other materials, heat energy transfer is said to occur through radiation. The infrared, visible, and part of the ultraviolet portion of the electromagnetic spectrum is considered pertinent to heat transfer. The waves originate at the atomic and molecular level but at the interior locations they are absorbed by the surrounding particles and hence radiation is generally treated as a surface phenomenon.

Heat transfer by radiation differs from conduction and convections in two aspects. While conduction and convection require a material medium, radiation does not and heat transfer can occur even under conditions of vacuum where it is generally the most effective. Also, the existence of a temperature gradient drives heat transfer by conduction and convection but the finite temperature of a single body is sufficient to initiate radiation. The transfer of energy from the sun to the earth, the warmth of a campfire, furnaces, light bulbs, and infrared scanners are some of the familiar examples of heat transfer by radiation.

The amount of energy radiated by a body is quantified by Stefan-Boltzmann's law for ideal surfaces or black bodies and is given as follows:

$$Q = \partial \cdot A \cdot T_s^4$$

Enerquip, LLC - Copyright 6/11/2010. All rights reserved.

Where,

Q = rate of heat transfer (Btu/h)
∂ = Stefan-Boltzmann's constant (Btu/hr-ft^2-^{o}F)
A = surface area (ft^2)
T_S = temperature of the surface (^{o}F)

The radiation originating from a surface occurs by one or a combination of several mechanisms: absorption, reflection or transmission. The extent of radiation emanating from the surface is dependent on the rates of each of these mechanisms.

EXAMPLE PROBLEM #1

"A glass contains two parts *water at room temperature (62°F). If one part of boiling water (212)^{o}F is poured into it, what will be the temperature of the entire system after one hour assuming a water height of 6" and a glass internal radius of 2"?"*

Assumptions:

- Glass container is 1/8" thick, inner radius of 2", and height of 6".
- Water in glass is 1/3 boiling water (212°F) and 2/3 room temperature water (62°F) results in an initial water temp of 112°F.
- Glass (including top) is perfectly insulated (no convection loss to the atmosphere).
- Free convection in the water is ignored.

Solution:
In order to find the equilibrium temperature (ignoring the natural convection in the fluid), we must find the amount of energy that is contained in the 112°F water, and compare that to amount of energy in the glass material at 62°F. Solve for the amount of energy held in the volume of the 112°F water and the volume of the 62°F glass, then use those values to find the total energy. From that total energy, solve for the equilibrium temperature of the system.

The properties of water and glass are needed for the calculation and all temperatures in the formula must be in degrees Rankine (an absolute temperature measurement based on the Fahrenheit scale). The total energy of the two bodies must then be distributed between them equally (for equilibrium) and a new T_{equil} is to be found.

Step 1 – Calculate the volume of water and glass -

From various tables the following are true:

T_{water} = 112°F = 571.67 ^{o}R
$Density_{water}$ = 61.84 lb/ft^3
C_{p_water} = 0.999 BTU/lb ^{o}R (specific heat)
t = height of base = 0.125 ft

T_{galss} = 62°F = 521.67 ^{o}R
$Density_{glass}$ = 138.9 lb/ft^3
C_{p_glass} = 0.199 BTU/lb ^{o}R (specific heat)
h = height of water = 0.5 ft

The volume calculations are as follows:

$Volume_{water} = \pi * r_i^2 * h = \pi * (2/12)^2 * (6/12)$
$= 0.0436$ ft^3 (the volume of the water)

$Volume_{glass} = \pi * r_o^2 * t + \pi * (r_o^2 - r_i^2) * h = \pi *(2.125/12)^2 * (.125/12) + \pi * [(.125/12)^2 - (2/12)^2] * (6/12)$
$= 0.006656$ ft^3 (the volume of the glass material)

Note: The glass volume includes the volume of the base and the side walls of the glass.

Enerquip, LLC - Copyright 6/11/2010. All rights reserved.

Step 2 – Calculate the energy for the system.

Energy of the water at 112 ^oF:

E_{water} [BTU]=$Volume_{water}$ [ft^3] x $Density_{water}$ [lb/ft^3] x C_{p_water}[BTU/lb ^oR] x T_{water}[^{o}**R**]

E_{water} [BTU]= 0.0436 [ft^3] x 61.84 [lb/ft^3] x 0.999 [BTU/lb ^oR] x 571.67 [^{o}**R**]

E_{water} = 1,540 BTU

Energy of the glass at 62 ^oF:

E_{glass} [BTU]=$Volume_{glass}$ [ft^3] x $Density_{glass}$ [lb/ft^3] x C_{p_glass}[BTU/lb ^oR] x T_{glass} [^{o}**R**]

E_{glass} [BTU]=0.006656 [ft^3] x 138.9 [lb/ft^3] x 0.199 [BTU/lb ^oR] x 521.67 [^{o}**R**]

E_{glass} = 96 BTU

The total energy in the system is E_{water} + E_{glass} = 1,636 BTU

(***Note: This assumes a fully insulated glass.)***

Step 3 – Calculate the initial equilibrium temperature of the glass and water.

Find how that energy is distributed at equilibrium by solving the following equation:

$E_{water(equil)}$ +$E_{glass(equil)}$ = 1,636 BTU.

Using the same equation as above T_{water} = T_{glass} (equilibrium), gives us the following:

$Volume_{water}$ [ft^3] x $Density_{water}$ [lb/ft^3] x C_{p_water}[BTU/lb ^oR] x $\underline{\mathbf{T_{EQUIL}}}$[^{o}**R**]

+

$Volume_{glass}$ [ft^3] x $Density_{glass}$ [lb/ft^3] x C_{p_glass}[BTU/lb ^oR] x $\underline{\mathbf{T_{EQUIL}}}$ [^{o}**R**]

= 1,636 BTU

Solving for T_{EQUIL} gives the following:

T_{EQUIL} = 108.88 ^oF

Assuming a fully insulated glass, ignoring convection in the water, and using an energy balance, the glass and the water will reach an initial equilibrium temperature of 108.88^oF.

Part 2 – Calculate the convection to the atmosphere after one hour – After confirming the initial equilibrium temperature of the glass and water is 108.88 ^oF, calculate the effect that convection plays when the atmosphere at 62^oF comes in contact with the outside of the glass.

Assumptions:

- Glass container is 1/8" thick, inner radius of 2", and height of 6".
- The outer surface is now at 108.88 ^oF (from Part 1).
- Top of glass in covered (no heat loss through the top)
- T_{glass} = 108.88 ^oF (568.55 ^oR) / T_{air} = 62 ^oF (521.67 ^oR) from Part 1
- Free convection in the water is ignored.
- Radiation to the atmosphere is ignored.

Solution:

In order to find the temperature of the glass and water after 1 hour, calculate the amount of heat lost to the atmosphere by convection over 1 hour using Newton's law of cooling:

$$Q_{convection} = h * A_s * (T_{glass} - T_{air})$$

Enerquip, LLC - Copyright 6/11/2010. All rights reserved.

Step 1 - Calculate the outer surface area of the glass (ignoring top and bottom of glass):

$$A_s = 2*\pi*r_o*h = 2*\pi*(2.125/12)*(6/12) = 0.556\ ft^{2.}$$

Step 2 – Assume the heat transfer coefficient of air in contact with a cylinder:

$$h = 1.40\ BTU/hr\text{-}ft^2\text{-}^oR$$

Step 3 – Calculate the convection heat loss for one hour

$Q_{convection}$ $= h * A_s * (T_{glass} – T_{air})$

$=1.40\ [BTU/hr\text{-}ft^2\text{-}^OR] * .556\ [ft^2] * (538.55 – 521.67)[^OR]$

= **36.49 BTU/hr**

Based on this total, the system loses 36.49 BTU of system energy per hour. The energy remaining after one hour is:

1,636 BTU (original energy) – 36.49 BTU (energy lost to the air = 1,599.51 BTU

Step 4 – Calculate the initial equilibrium temperature of the glass and water.

Find how that energy is distributed at equilibrium by solving the following equation:

$$E_{water(equil)} + E_{glass(equil)} = 1{,}599.51\ BTU$$

Using the same equation as above $T_{water} = T_{glass}$ (equilibrium), gives us the following:

$$Volume_{water}\ [ft^3] \times Density_{water}\ [lb/ft^3] \times C_{p_water}[BTU/lb\ ^oR] \times T_{EQUIL}[^oR]$$
$$+$$
$$Volume_{glass}\ [ft^3] \times Density_{glass}\ [lb/ft^3] \times C_{p_glass}[BTU/lb\ ^oR] \times T_{EQUIL}\ [^oR]$$

$$= 1{,}599.51\ BTU$$

Solving for T_{EQUIL} gives the following:

$$\mathbf{T_{EQUIL} = 96.2\ ^oF}$$

If it is assumed that only convection heat is loss to the atmosphere occurs, the system temperature will be at 96.2 ^{o}F after one hour.

Part 3 – Combined Convection and Radiation to the Atmosphere – In addition to convection heat transfer, radiation heat transfer will also affect the final temperature of the glass after one hour. Calculating the temperature of the glass after one hour when both convection and radiation heat transfer occur starts by using the 108.88 ^{o}F initial equilibrium temperature that was calculated in Part 1 (when the glass was fully insulated).

Assumptions:

- Glass container is 1/8” thick, inner radius of 2”, and height of 6”.
- Outer surface is now at 108.88 ^{o}F (568.55 ^{o}R) from Part 1
- The air temperature is at 62 ^{o}F (521.67 ^{o}R)
- Top of glass is covered (no heat loss through the top)
- Free convection in the water is ignored.

Enerquip, LLC - Copyright 6/11/2010. All rights reserved.

Solution:
Find the radiation heat loss and add it to the convection heat loss calculated in Part 2 to find a total heat loss from the system.

For the radiation portion of the heat loss, use the following relationship (note-temperatures must be in ^oR for this calculation) :

$$\mathbf{Q_{radiation} = A_s * \varepsilon * \sigma * (T_{glass}^4 - T_{air}^4)}$$

Calculate the outer surface area of the glass (ignoring top and bottom of glass):

$$A_s = 2*\pi*r_o*h = 2*\pi*(2.125/12)*(6/12) = 0.556\ ft^{2.}$$
$$\sigma = 0.1714 \times 10^{-8}\ BTU/hr\text{-}ft^2\text{-}^oR^4$$
(Note: σ is Stefan-Boltzmann's constant)

From tables, assume the emissivity of the glass to be:
$$\varepsilon = 0.85$$

Based on these values calculate the radiation heat loss to the system using the following equation:

$Q_{radiation} = A_s * \varepsilon * \sigma * (T_{glass}^4 - T_{air}^4)$
$= .556\ [ft^2] * 0.85 * 0.1714 \times 10^{-8}\ [BTU/hr\text{-}ft^2\text{-}^oR^4] * \{(568.55\ ^oR)^4 - (521.67\ ^oR)^4\}$
= **24.65 BTU/hr.**

The convection and radiation heat exchange losses from the glass to the atmosphere can be calculated as follows:

$Q_{total} = Q_{radiation} + Q_{convection}$
= 24.65 BTU/hr + 36.49 BTU/hr
= **61.14 BTU/hr**

If 61.14 BTU's are lost over one hour, the new total energy of the system (from Part 1 and Part 2) is calculated to be:

1,636 BTU (original heat at equilibrium) – 61.14 BTU = **1,574.86 BTU**

$Volume_{water}\ [ft^3] \times Density_{water}\ [lb/ft^3] \times C_{p_water}[BTU/lb\ ^oR] \times \underline{\mathbf{T_{EQUIL}}}[\mathbf{^oR}]$
+
$Volume_{glass}\ [ft^3] \times Density_{glass}\ [lb/ft^3] \times C_{p_glass}[BTU/lb\ ^oR] \times \underline{\mathbf{T_{EQUIL}}}\ [\mathbf{^oR}]$
1574.86 BTU.

Solving this for the T_{EQUIL} gives the following
$$\mathbf{T_{EQUIL} = 87.63\ ^oF}$$

Conclusions - The example calculates the effect that the various heat transfer mechanisms had on the glass. It shows that a glass at room temperature of 62^0F filled with 112^0F water and insulated from all heat loss to the atmosphere will reach an equilibrium temperature of 108.88^oF. If that same glass is exposed to convection heat transfer with air at 62^oF with no radiation heat

Enerquip, LLC - Copyright 6/11/2010. All rights reserved.

loss, the glass will reach a temperature of 96.2^{o}F after one hour. If radiation heat loss also occurs, the glass reaches 87.63 ^{o}F after one hour.

In this example, the dominant heat transfer from the water is conduction into the glass itself, while the convection and radiation play lesser roles. If this same glass were to be exposed to forced convection (E.g. – a fan blows air across the glass surface) heat transfer from convection would be more pronounced because the heat transfer coefficient (h) would be much higher than the one in the example.

Shell and Tube Heat Exchangers

Heat exchangers operate because heat transfer occurs when there is a temperature difference between a cold process stream and a hot process stream. The two streams are separated by a thin, solid wall. This wall must be conductive in order for heat exchange to occur yet strong enough to withstand any pressure by the fluids or gases. In a shell and tube heat exchanger, two closed process streams move through the unit – one on the tube side (inside the tube) and one on the shell side. One is hot and the other is cold. Using convection and conduction, heat passes from the hot stream to the cold stream from the tube side or from the shell side.

The rate of heat transfer is affected by the temperature difference between the two process streams. As the temperature difference increases between the two process streams, the heat exchange rate per unit of surface area increases. Conversely, the heat exchanger per unit of surface area drops at a non-linear rate as the temperature difference between the two process streams drops. Raising the effective surface area of the total system helps to maintain total heat transfer between the two streams but eventually a point is reached where additional surface area cannot affect any significant additional heat transfer.

Another variable affecting heat exchange in a shell and tube exchanger is the velocity of each process stream. Velocity contributes directly to increased convection between the cold and hot process streams. Depending on the type of shell and tube heat exchanger, increasing velocity increases heat exchange, especially in a countercurrent design. Eventually, velocity increases are limited by the maximum allowed for a specific metallurgy comprising the shell or the tube. In carbon steel, velocity cannot go above is 6 ft/sec. while in stainless and high alloy steel, the rate is 12 ft/sec. for liquids.

The three kinds of shell and tube heat exchangers produced are parallel, cross flow and countercurrent flow. The names indicate the direction of the process streams in relationship with each other. In a countercurrent heat exchanger, the average temperature difference between the two process streams is maximized over the length of the exchanger, exhibiting the highest heat transfer rate efficiency per unit of surface area. In terms of available temperature differences observed during operation, parallel exchangers exhibit the lowest, followed by cross flow, then countercurrent exchangers. The Figure below shows designs of countercurrent and parallel flow heat exchangers.

Enerquip, LLC - Copyright 6/11/2010. All rights reserved.

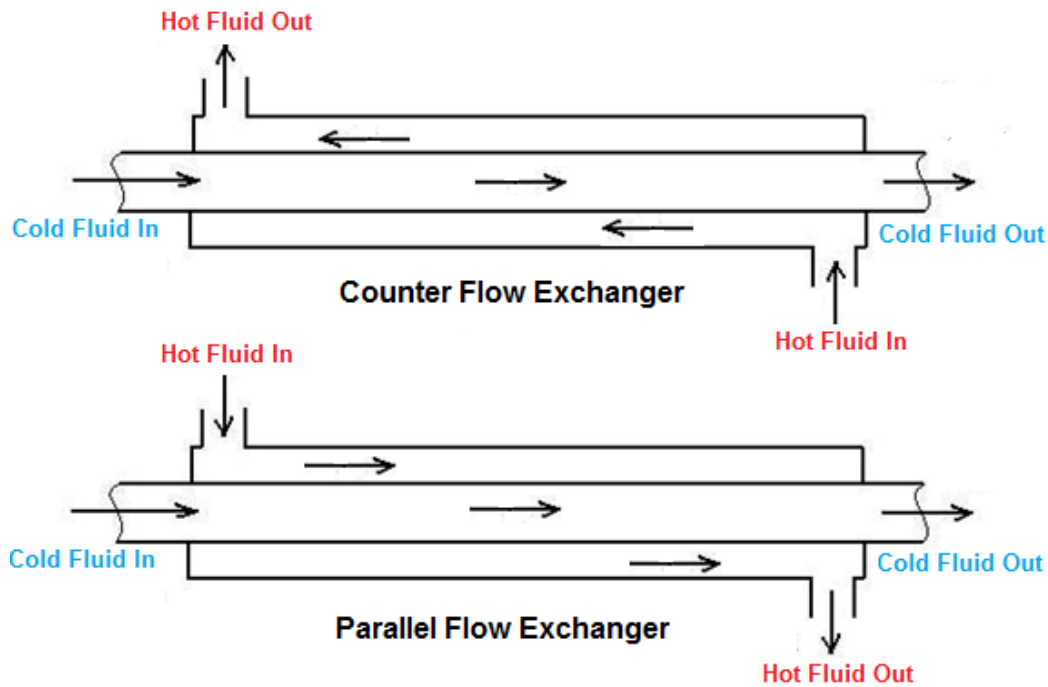

The log mean temperature difference (also known by its acronym LMTD or ΔT_{lm}) is used to determine the temperature driving force for heat transfer in flowing systems, most notably in heat exchangers. The ΔT_{lm} is a logarithmic average of the temperature difference between the hot and cold streams at each end of the exchanger. The larger the ΔT_{lm}, the more efficiently heat is transferred. ΔT_{lm} assumes constant flow rate and fluid thermal properties. It is calculated using the following equation:

$$\Delta T_{lm} = \frac{\Delta T_2 - \Delta T_1}{ln \frac{\Delta T_2}{\Delta T_1}}$$

Once calculated, the ΔT_{lm} is usually applied to calculate the rate of heat transfer in an exchanger according to the following simple equation:

$$Q = U_o * A_o * \Delta T_{lm}$$

Where:

Q = Heat transfer rate (BTU/hr)
$\mathbf{U_o}$ = Overall heat transfer coefficient (BTU/hr-ft^2-^{o}F)
$\mathbf{A_o}$ = Cross section heat transfer area (ft^2)
$\Delta \mathbf{T_{lm}}$ = Log mean temperature difference (^{o}F)

*Note: estimating the heat transfer coefficient may be quite tricky.

Below is a sample problem that calculates the heat transfer rate between a countercurrent and a parallel shell and tube heat exchanger.

Enerquip, LLC - Copyright 6/11/2010. All rights reserved.

EXAMPLE PROBLEM #2: Calculate the heat transfer rate in parallel and countercurrent heat exchangers operated under the same conditions with the same two liquids.

$\underline{T_1}$ = the hot fluid temperature
T_{1in} = the hot fluid temperature in = **195 °F**
T_{1out} = the hot fluid temperature out = **145 °F**

$\underline{T_2}$ = the cold fluid temperature
T_{2in} = the cold fluid temperature in = **60 °F**
T_{2out} = the cold fluid temperature out = **100 °F**

U_o = 70 BTU/hr-ft^2-°F
A_o = 100 ft^2

Solution: First, calculate the log mean temperature for each of the two systems:

Counter-current Flow $\Delta T_{lm} = \frac{(195-100F)-(145-60F)}{ln\frac{(195-100F)}{(145-60F)}}$ **= 89.9 °F**

Parallel Flow $\Delta T_{lm} = \frac{(195-60F)-(145-100F)}{ln\frac{(195-60F)}{(145-100F)}}$ **= 81.9 °F**

Second, calculate the rate of heat transfer for each of the two systems:

Counter-current Flow U (BTU/hr) = (70 BTU/hr-ft^2-°F) * (100 ft^2) * 89.9 °F
= <u>629,300 (BTU/hr)</u>

Parallel Flow U (BTU/hr) = (70 BTU/hr-ft^2-°F) * (100 ft^2) * 81.9 °F
= <u>573,300 (BTU/hr)</u>

As demonstrated by the sample problem, operating a shell and tube heat exchanger in the counter-current mode results in greater heat exchange between the two streams than what could be expected in a parallel flow exchanger. It also shows that the countercurrent exchanger requires less total surface area to achieve the same level of heat exchanger. (If the U value and the LMTD are fixed, surface area must increase).

Actual heat exchangers are more complex than the simple components shown in the idealized figures used above. Many factors impact heat exchanger design. These include size, cost, weight, efficiency, fluid types, operating pressures, temperatures and fouling factors. Each individual characteristic impacts the resulting design and must be considered in the final thermodynamics calculations.

One approach used by heat exchanger designers to maximize the available heat transfer within the exchanger is having two streams pass each other several times within a single exchanger. This increases the performance and reduces the size needed for a specific heat exchange application. When a heat exchanger's fluids pass each other more than once, a heat exchanger is called a multi-pass heat exchanger. If the fluids pass each other only once, the heat exchanger is called a single-pass heat exchanger. Commonly, the multi-pass heat exchanger reverses the flow in the tubes by use of one or more sets of "U" bends in the tubes. The "U" bends allow the fluid to flow back and forth across the length of the heat exchanger. The figure below shows both single- and multiple pass designs.

Enerquip, LLC - Copyright 6/11/2010. All rights reserved.

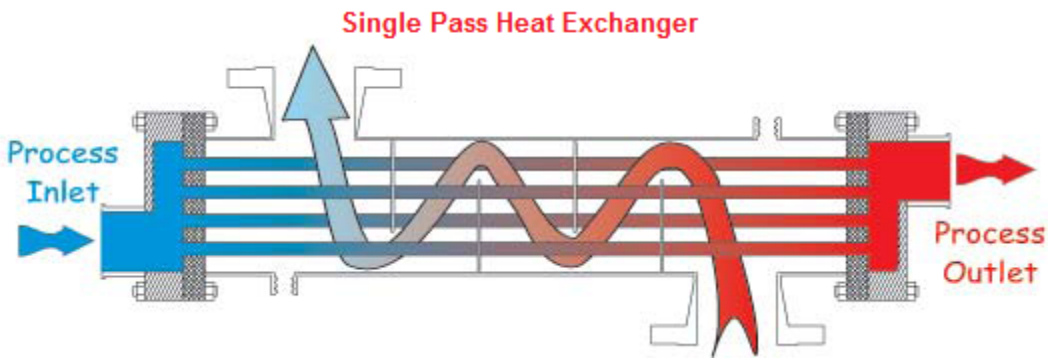

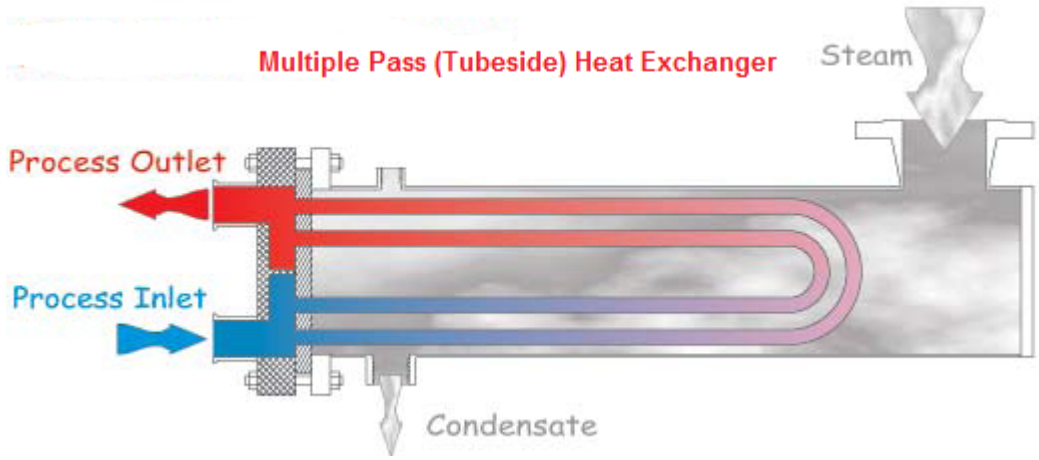

Heat exchanger designs vary based on throughput, thermal duty, local maintenance requirements, size requirements, heat transfer media, the chemical state of the materials (liquid or gas) and physical properties of the materials (e.g. specific heat, viscosity, specific gravity, fouling factors, etc.). Each design incorporates all of these factors. After looking at heat transfer requirements, the designer takes the following into consideration:

- Tube Size – smaller diameter tubes mean more surface area and increased fluid turbulence but also higher pressure drop
- Tube Count – more tubes mean more surface area but there might not be enough room in the given diameter
- Tube Length – longer tubes mean more surface area but plant space or pressure drop may limit the final length of a specific design
- Process Stream Velocity – higher velocity (usually created in a design by increasing the number of passes) increases heat exchange but is limited by materials of construction, viscosity of the process stream and available pressure drop
- Baffles – increasing the number of baffles increases heat transfer and pressure drop
- Shell Diameter – increasing diameter allows more tubes but greatly increases the cost
- Materials of Construction – stainless steel, higher alloy steels, carbon steel affect the performance of the exchanger due to the thermal conductive properties of each material.

Enerquip, LLC - Copyright 6/11/2010. All rights reserved.

Every shell and tube heat exchanger uses several unique subassemblies to ensure proper heat transfer occurs. The process flow requires the tube side stream to flow into a chamber or **Waterbox** that is designed to equally distribute the stream across the tubesheet into the **Tube Bundle**. The stream progresses through the tubes until it exits across a tubesheet into a waterbox. If the exchanger is straight through, the stream exits the unit. If it is a "U" tube design, the stream flows back into a different zone of the original waterbox for another pass or exits the exchanger. From the shell side, the process stream enters the shell and may impinge on a deflection plate to move it through the shell. Depending on the design, a preselected number of baffles force the stream through an indirect path so that it passes around all of the tubes until it exits. **Appendix A** contains a glossary of common heat exchanger terms.

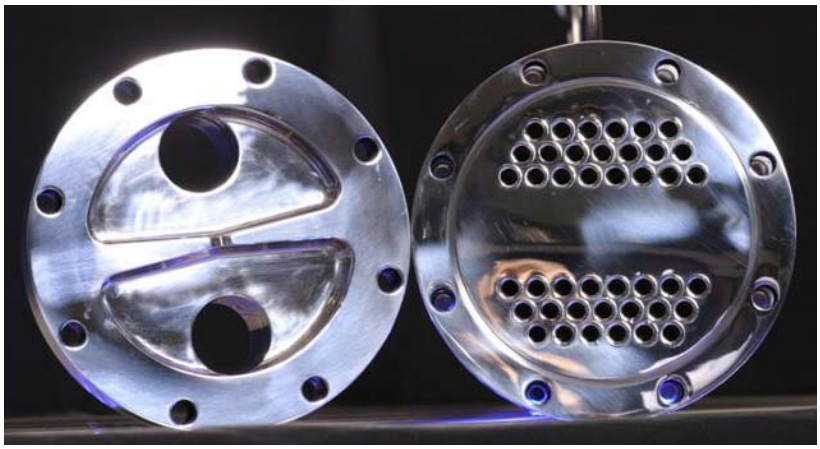

Due to local maintenance requirements or the materials of exchange, the tube bundle can be designed to be removable for scheduled cleaning or replacement on a regular schedule. The design could also utilize a **double tube sheet** where a second tube sheet connects the bundle to the shell for quick leak detection and sanitary construction. Most sanitary shell and tube exchangers have the requirement to be drainable so all cleaning solutions can be completely removed. These designs require **weep holes**, a **bowtie** configuration for the **pass partitions** in the waterbox, outlet holes flush with the edge of the exchanger wall, and supports that angle the entire unit slightly.

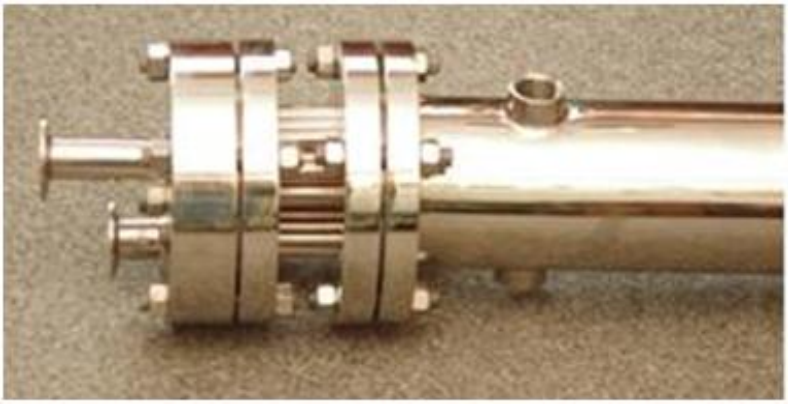

The ASME (American Society of Mechanical Engineers) sets the basic manufacturing standards for pressure vessels like heat exchangers. Other industry groups include 3-A, TEMA, PED, and CE. These standards are meant to define basic construction types, welding processes, and material thicknesses while providing safety, reasonable cost and serviceability. Common nomenclature was developed by TEMA to describe the front head, shell, rear head and tubes. Every variety of shell and tube heat exchanger that can be described using this nomenclature is found in the table below from the TEMA website.

Enerquip, LLC - Copyright 6/11/2010. All rights reserved.

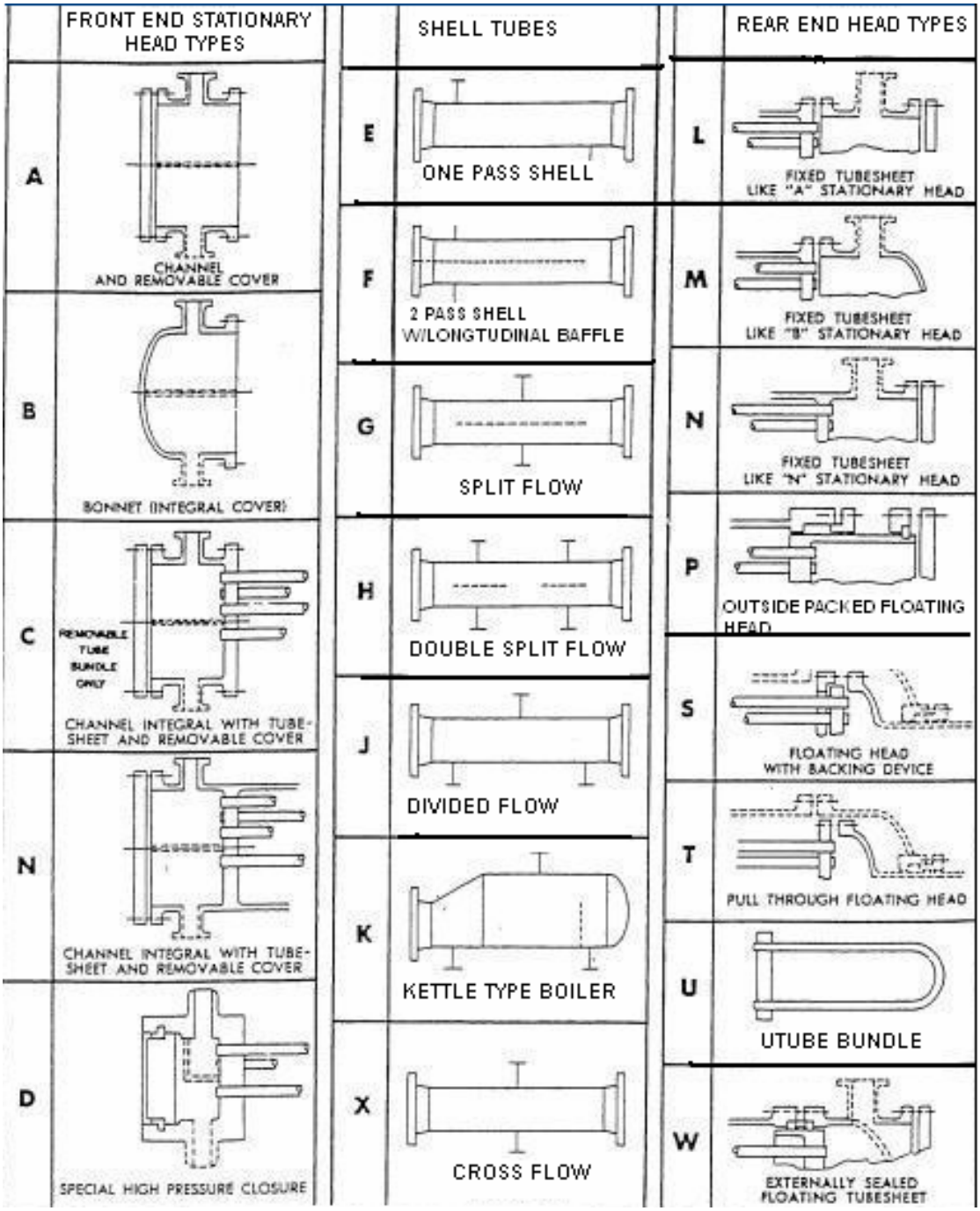

Process connections are the last element of the design. Ranging from sanitary tri-clamps to threaded connections to ANSI flanges, these unique accessories are the process link to the rest of the operation.

At Enerquip, most of the designs we build are for sanitary applications for use by plants producing food, beverages, milk, cheese, and pharmaceutical products. We also design and build a number of industrial grade units for use by fine chemical, petroleum refining, pulp and paper, utility, and clean fuels plants.

Enerquip, LLC - Copyright 6/11/2010. All rights reserved.

Case Studies

After reviewing the basic fundamentals of heat exchange and shell and tube heat exchanger design, it is time to show how these heat exchange principals are applied to real world applications.

Heat exchangers perform process work. They also recover energy, a key issue given the cost of energy in resources and its effect on the environment. After looking at heat exchange fundamentals, a key objective of this paper was to show how companies use heat exchangers and benefit from reduced greenhouse gas emissions. For the purpose of this discussion, only CO2 emissions have been calculated.

Three case studies were developed from real customer plant situations. The company names and complete application are withheld under confidentiality. Each case will discuss the situation, the conditions, the heat exchanger details and the results. Using energy calculations from several different websites, the Btu's / hour that were recovered have been converted into pounds of CO2 saved and the efficiency of using that fuel are found in the following factor table.

Fuel	Usage Rate	CO2 / MBtu	Efficiency Rating
Fuel Oil	$3.61 / gal	161 lbs	70%
Natural Gas	$1.469 / ccf	117 lbs	80%

At the end of each case is a summary of the cost savings and tons of Greenhouse Gas reduction (GHG).

Case 1 – Potato Chip Fryers

Situation A potato chip plant operated several lines where 6,000 pounds per hour of potato chips are fried in hot oil. The vapor from the fryer line contained steam and air. It was being vented to atmosphere without any opportunity to recover it for use elsewhere in the plant.

Conditions Stream / Air Mixture = 26,500 #/hr @ 230°F
On steam Efficiency Factor = 330 days

Heat Exchanger Details

Diameter:	36 Inches
Length:	240 Inches
Configuration:	BEMH (straight through design horizontally mounted on top of the roof)
Heat Transfer Area:	3,471 Sq. Ft
Tube side Fluid:	Steam / Air Mixture (26,500 #/hr)
Tube side conditions:	Inlet = 230°F Outlet = 147°F @ atmospheric conditions
Shell Side Fluid:	Propylene Glycol (40%) (275,000 #/hr)
Shell side conditions:	Inlet temperature = 120°F Outlet temperatures = 175°F
Heat Exchanged:	14,000,000 Btu / Hr
U Clean:	188.76 (unit has excess surface area in clean condition)
U Dirty:	145.94 (excess surface area kicks in during fouled state)
Note:	Water vapor condensed is 13,080 #/hr (phase change)

Enerquip, LLC - Copyright 6/11/2010. All rights reserved.

Result The Company used the 14 MBtu/hr recovered by the heat exchanger to preheat city water using a propylene glycol loop, saving fuel costs and reducing emissions. When designing this solution, allowance had to be made for the condensation of the steam formed when the potatoes cooked in the hot oil. This affects the heat exchange through heat of condensation and the vapor pressure for the entire system. As steam condenses, partial pressure can drop and lower the condensation temperature as the system moves into a partial vacuum range. This was not the case in this application as the tube side out stayed at atmospheric conditions. The company was also able to recover all of the water and reuse it elsewhere in the plant instead of releasing it to atmosphere with the heat.

The energy and GHG emission savings from the project are in the table. No attempt was made to measure the value from the recovered water.

Fuel	Quantity / Yr.	Savings / Yr.	Emissions/Yr
Fuel Oil	1,147,826 gal	$4,143,652	8,926 tons
Natural Gas	136,821,323ft^3	$2,009,905	522 tons

Case 2 – Oil Cooler / Water Heater

Situation A pulp plant wanted to reuse heat from ISO 32 Grade oil (SAE Grade 10) to heat water in the tower and cool the oil servicing a large engine. In this case, the heat transfer coefficient values for oil are low so a larger heat transfer area is needed to capture the latent heat.

Conditions Oil flow - 61,703 #/hr @ 129 ^{o}F
On stream Efficiency Factor = 345 days

Heat Exchanger Details

Diameter:	18 Inches
Length:	120 Inches
Configuration:	2 exchangers BEW (Straight through design with removable tube bundle) Oil - series flow through both exchangers Water - parallel flow split 50/50 into each exchanger
Heat Transfer Area:	982 ft^2 (491 ft^2 in each exchanger)
Tube side Fluid:	Tower water (105,150 #/hr – 2 units @ 52,575 #/hr each)
Tube side conditions:	Inlet temperature = 90°F Outlet temperature = 96.7^{o}F (average)
Shell Side Fluid:	ISO 32 Oil (61,703 #/hr – series flow through 2 units)
Shell side conditions:	Inlet temperature = 129°F Outlet temperature = 104°F (after 2nd exchanger)
Heat Exchanged:	706,112 Btu / Hr
U Clean:	44.73 (unit has excess surface area in clean condition)
U Dirty:	40.80 (excess surface area kicks in during fouled state)

Enerquip, LLC - Copyright 6/11/2010. All rights reserved.

Result These exchangers were designed to cool the oil, transferring heat at a rate of 706,112 Btu/hr. With the poorer heat transfer coefficient on the shell side for the oil and an inlet water temperature that was only 40°F lower than the oil inlet, a lower number of Btu's were transferred than if the shell side were steam or hot water. The energy and GHG emission savings are in the table below.

Fuel	Quantity / Yr.	Savings / Yr.	Emissions/Yr
Fuel Oil	60,524 gal	$218,491	470.7 tons
Natural Gas	7,214,471 ft^3	$105,980	27.5 tons

Case 3 – Concentrate Sugar Slurry

Situation A cereal manufacturer needed to concentrate a sugar solution from 67 Brix to 81 Brix in its process to achieve a higher concentration homogenous slurry. After concentration, cereals are coated with various flavored ingredients. This is a two phase application where liquid slurry is carried by vaporizing fluid.

Conditions Convert sugar slurry from 67 Brix (3,022 #/hr) to 81 Brix (2,500 #/hr)
On stream Efficiency Factor = 330 days

Heat Exchanger Details

Diameter:	8.625 Inches
Length:	96 Inches
Configuration:	BEMV (Vertical Straight through Design)
Heat Transfer Area:	109 Sq. Ft
Tube side Fluid:	Inlet sugar slurry = 67 Brix (3,022 #/hr)
	Outlet sugar slurry = 81 Brix (2,500 #/hr)
Tube side conditions:	Inlet temperature = 180°F
	Outlet temperature = 235°F
Shell Side Fluid:	Saturated Steam (687 #/hr)
Shell side conditions:	80 PSIG at 324°F
Heat Exchanged:	611,206 Btu / Hr
U Clean:	138.69 (unit has excess surface area in clean condition)
U Dirty:	74.96 (excess surface area kicks in during fouled state)

Result This was a process driven application reusing low pressure steam from another area of the plant. In food applications, fouling factors can vary widely. Compared to the other cases, this sugar case requires more excess surface area to maintain heat transfer when fouling occurs. To minimize this issue, a vaporizing fluid is used and the heat exchange occurs in two stages. Please note that the on stream efficiency factor is only 330 days per year due to the downtime required for cleaning after fouling reaches a certain level. The energy and GHG emission savings are in the table below.

Fuel	Quantity / Yr.	Savings / Yr.	Emissions/Yr
Fuel Oil	50,111 gal	$180,902	389.7 tons
Natural Gas	5,973,287 ft^3	$87,748	22.8 tons

Enerquip, LLC - Copyright 6/11/2010. All rights reserved.

Appendix A - Glossary of Heat Exchanger Terminology

ASME ASME stands for "The American society of Mechanical Engineers. The ASME Boiler and Pressure Vessel Code is comprised of a set of manufacturing standards that are meant to define basic construction types and material thickness while providing safety, reasonable cost and serviceability. ASME Section VIII Div 1 Standards for unfired pressure vessels always govern shell and tube heat exchangers. Materials used in fabrication of these heat exchangers are in accordance with ASME Section II and all welding processes associated with fabrication are in accordance with ASME Section V.

Baffle Typically these are plates with holes about the size of tube diameters. They provide structural integrity to tube bundle that is at times referred to as "stack of tubes". The primary function of baffles is to provide turbulence and proper mixing of shell side fluids.

Baffle Spacing Baffle spacing is the distance between baffles in a tube bundle. As it forces liquid to change direction from one end to the other, the baffle spacing has an effect on fluid velocity, pressure drop and heat transfer rate. This effect is more pronounced when there is liquid media on the shell side. An optimal design uses the available pressure drop in an application by spacing the baffles accordingly to maximize the effective heat transfer rate.

Bundle Assembly A common term used in U-tube heat exchangers. The bundle contains tubes, tie rods, baffles and tubesheet/tubesheets.

Channel Box Also referred to as head or waterbox of the heat exchanger. They contain pass partitions that constrain fluid to flow through defined number of tubes. In straight through designs there are two channel boxes; one defined as front end and the other as return end.

Core Assembly A common term used in straight through fixed tubesheet designs. The core assembly contains tubes, tie rods, baffles and tubesheets.

Design Pressure The pressure used to determine the thickness of components and serves as criteria for determining the hydrotest pressure.

Ferrules These are also referred to as Triclamps that are used in Sanitary Heat Exchangers where threaded or flanged connections are unacceptable.

Fixed Tubesheet A tubesheet that is permanently welded to the shell as in the case of nonremovable core assembly.

Floating Tubesheet A tubesheet that is not permanently welded to the shell as in the case of a BEP style design. A floating tubesheet design allows for thermal expansion and contraction of the tube bundle independent of the shell.

Foot Supports Adjustable saddle supports with strap-around for horizontal heat exchangers. For vertical heat exchangers, mounting supports are welded to a bellyband that is in-turn welded to the exterior of the shell.

Impingement Plate A plate that is welded inside a shell entrance port in a domed design or welded directly to the tube bundle. Impingement plates help reduce fluid velocity, provide better fluid distribution across the tube bundle and protect tubes from surface

Enerquip, LLC - Copyright 6/11/2010. All rights reserved.

erosion. In U-tube heat exchangers it is common to have the shell side inlet off the end of the tube bundle rendering an impingement plate unnecessary.

Lantern Ring A metal ring on BEP style designs, which are generally installed over the outside of diameter of rear floating tubesheets to hold the seals in place.

Nameplate This carries the ASME U Stamp and valuable information such as design pressure, design temperature and mean design metal temperature.

O-rings This serves as a sealing device between two components. O-rings are generally used between the tube sheet and channel box, between the tube sheet and shell flange in U-tube construction. O-ring materials are usually EPDM, Viton or in high pressure applications, spiral wound metal.

Packed Head The end of the tube bundle that contains the floating head design and lantern rings in a BEP style design.

Pass Partition The rib section inside a channel head that constrains tube side flow through defined number of tubes in a multi-pass heat exchanger.

Shell Head A formed plate which is welded to the shell pipe. In most instances, a flat end plate cover is more economical.

Slip On Flange A flange design that features a flange ring that slides over and is welded onto a pipe section or nozzle pipe.

Spacer A piece of tubing that slides over the tie rod between baffle plates to secure the baffle position in a tube bundle.

Stud Bolt A stud bolt is threaded rod that extends through holes in two mating surfaces and is secured with hex nuts on each end.

TEMA It stands for Tubular Exchanger Manufacturers Association. TEMA guidelines cover manufacturing, installation, operation and maintenance of shell and tube heat exchangers.

Test Pressure Pressure at which hydrostatic testing is carried out on heat exchangers to detect any leaks on shell and tube sides of the heat exchanger. Test pressures are defined by ASME that is generally 1.3 times design pressure plus pressure compensation for ambient water used during hydrostatic test.

Tie Rod A small diameter rod that threads into the tubesheet and secures the baffles and spaces together.

Tube Layout Defines the size of tube, tube pitch and pattern of tubes within a tube bundle or core assembly.

Tubesheet Typically made out of a plate. Tube sheets have holes that correspond with tube layout. Tubes are secured in holes by roller expansion and seal welding. Tube sheets can contain grooves inside tube holes to provide strength to joints.

Weld Neck Flange These types are generally used on pulled nozzle ports. In some cases, welding is more efficient by using a backing ring behind two mating beveled edges.

Enerquip, LLC - Copyright 6/11/2010. All rights reserved.

L/S® Cartridge Pump Systems

Low-flow capability with a high-accuracy digital drive

- Cartridges accept multiple tubing sizes for wide flow range
- Cartridges snap in and out for tubing changes; change tubing in one channel without disturbing others
- Finely adjust occlusion to increase accuracy
- Use only one cartridge, or load to capacity
- Digital dispensing drive features maintenance-free brushless motor
- Program dispensing parameters, including delay interval, for automated dispensing
- Four-channel, eight-roller pump offers lowest pulsation for better accuracy
- 1/10-hp continuous-duty brushless drive
- Tach feedback for ±0.1% drive speed control
- Remote control via DB25 female connector on drive
- IP33 rated, stackable ABS housing
- Membrane keypad with lockout
- See pages 1540–1541 for complete drive specifications

Multiple-channel low-flow transfer and perfusion!

77919-20

How to Load Your Pump Head

1. Select tubing, load tubing into cartridge, and set tubing retainers.

2. Snap cartridge into place on pump head.

3. Adjust occlusion using index scale on cartridge.

Specifications & Ordering Information

ISO 9001:2008 CERTIFIED SUPPLIER · ETL · CE · 2 year warranty

Catalog number	Flow range† (mL/min)	Pump head included	Tubing included	Tubing sizes accepted	Drive included	Drive speed range (rpm)	Drive IP rating	Power (50/60 Hz)	Price
L/S eight-channel four-roller cartridge pump system									
T-77919-20	0.0034 to 18	L/S Cartridge head 07519-06 with eight small cartridges 07519-80	Tygon E-LFL microbore tube set, 1.42-mm ID 06447-34; pk of 12	Microbore tube sets; L/S 13, L/S 14	07523-90	0.02 to 100	IP33	90 to 130 VAC, 2.2 A; 190 to 260 VAC, 1.1 A	
L/S reduced-pulsation four-channel eight-roller cartridge pump system									
T-77919-30	0.0024 to 12	L/S Cartridge head 07519-20 with four small cartridges 07519-85	Tygon E-LFL microbore tube set, 1.42-mm ID 06447-34; pk of 12	Microbore tube sets; L/S 13, L/S 14	07523-90	0.02 to 100	IP33	90 to 130 VAC, 2.2 A; 190 to 260 V AC, 1.1 A	

†Flow range with included tubing; extend the flow range of these systems with additional sizes of tubing; order microbore two-stop tube sets below and L/S tubing on pages 1521–1527.

Additional Microbore Two-Stop Pump Tube Sets

Pump tubing		0.89 mm ID	1.42 mm ID	2.06 mm ID	2.79 mm ID
Flow rate per channel (mL/min)	Cartridge head 07519-06	0.0015 to 7.4	0.0034 to 18	0.0074 to 37	0.0126 to 63
	Cartridge head 07519-20	0.0010 to 5.2	0.0024 to 12	0.0044 to 22	0.0068 to 34
Platinum-cured silicone		T-06421-26 /pk of 6	T-06421-34 /pk of 6	T-06421-42 /pk of 6	T-06421-48 /pk of 6
Santoprene®		T-06431-26 /pk of 12	T-06431-34 /pk of 12	T-06431-42 /pk of 12	T-06431-48 /pk of 12
Tygon® E-LFL		T-06447-26 /pk of 12	T-06447-34 /pk of 12	T-06447-42 /pk of 12	T-06447-48 /pk of 12
Viton®		T-96428-26 /pk of 12	T-96428-34 /pk of 12	T-96428-42 /pk of 12	T-96428-48 /pk of 12

Additional Cartridges

T-07519-80 Additional small cartridge for pump system 77919-20

T-07519-85 Additional small cartridge for pump system 77919-30

07519-80

ReadyToProcess™ Columns

ReadyToProcess columns are prepacked, prequalified, and presanitized process chromatography columns available with a range of BioProcess™ media in four different sizes: 1.0 l, 2.5 l, 10 l, and 20 l (Fig 1).

ReadyToProcess columns are designed for purification of biopharmaceuticals for clinical phase I and II studies. Depending of the scale of operations they can also be used for full-scale manufacturing, as well as for preclinical studies. The columns can, however, be used in any chromatographic application for separation of various compounds, for example proteins, endotoxins, DNA, plasmids, vaccines, and viruses.

ReadyToProcess columns provide:

- Time savings by making several time-consuming steps redundant
- Cost savings by lowering buffer consumption and reducing cleaning validation demands
- Process security in terms of robust column performance
- Scalability to facilitate conventional approach in larger scale
- No cross-contamination problems

ReadyToProcess columns make several steps redundant (column packing, column qualification, and sanitization), and significant time saving can be achieved in the downstream processing. ReadyToProcess columns are closed units and the design allows easy disposal after completed production.

ReadyToProcess chromatography columns offer the possibility to work in a fully flexible mode in early clinical phases while keeping a conventional re-use option for large-scale manufacturing open. The chromatography media used in ReadyToProcess columns have a long track-record of use in full-scale manufacturing using conventional, large-scale chromatography, where columns can be used for tens or hundreds of cycles. The transition from ReadyToProcess format to full-scale manufacturing is therefore straightforward.

Fig 1. ReadyToProcess columns are easily connected to a chromatography system and can be disposed of after completed production.

Currently, the following BioProcess media are available in the ReadyToProcess format: MabSelect SuRe™, Capto™ Q, Capto S, Capto adhere, and Phenyl Sepharose™ 6 Fast Flow (low sub). On request, also the following media are available: Capto MMC, Q Sepharose FF, SP Sepharose FF, and DEAE Sepharose FF.

ReadyToProcess column characteristics

The hardware of ReadyToProcess columns follows the construction of BPG™ columns, with a media packing valve added, and is designed for upwards flow (Fig 2).

The columns have fixed bed heights of 200 mm, which is the optimum for contact time, flow, and capacity for modern chromatography media. Pressure/flow curves for ReadyToProcess Capto adhere, MabSelect SuRe, and Phenyl Sepharose 6 Fast Flow columns are shown in Figure 3 for operation with water at room temperature (20°C).

The polymer materials used to manufacture ReadyToProcess columns have been chosen for their biological and chemical compatibility with the samples, buffers, and solutions used during operation and during sanitization procedures.

Fig 2. ReadyToProcess column with assembled nets and media packing valve. Arrows show flow direction.

The materials meet the USP (United States Pharmacopeia) class VI requirements according to USP <88> Biological Reactivity Tests, "In Vivo" and FDA CFR 177. The material is free from material of animal origin or has been produced under manufacturing conditions complying with EMEA/410/01. The columns are designed to comply with hygienic requirements. Table 1 below lists the wetted materials.

Table 1. List of wetted materials in ReadyToProcess columns

Trade name	Material	Column part
PP	Polypropylene	Column tube, lids, TC connections, support nets, support screens, stream stoppers, hose connections, welded tubing for inlet/outlet protection
PEEK	Polyetheretherketone	Plug at inlet tubing, filter holder, media packing valve
Tygon™ 2275	Polyolefin	Hose (inlet tubing)
FPM	Fluorocarbon rubber	O-rings
EPDM	Ethylenepropylenediene	TC gaskets

Table 2. Characteristics of ReadyToProcess columns

	1 l	2.5 l	10 l	20 l
Inner diameter (mm)	80	126	251	359
Inner cross section (cm^2)	50	124	495	1012
Column volume (l)	1.0	2.5	9.9	20.2
Packed bed height (mm)	200	200	200	200
Net mesh (µm)	23	23	23	23
Mechanical compression factor (%)*	≤15	≤15	≤15	≤15
Outer height (mm)	382	378	388	407
Outer diameter incl. lid (mm)	155	195	342	484
Weight (kg)	~3	~6	~25	~55
Inlet TC25 connectors, tubing i.d.	4.8 mm 0.19"	6.3 mm 0.25"	9.5 mm 0.375"	12.7 mm 0.5"
Outlet TC25 connectors, tubing i.d.	4.8 mm 0.19"	6.3 mm 0.25"	9.5 mm 0.375"	12.7 mm 0.5"
Ambient temperature† (°C)	4-30	4–30	4–30	4–30
Liquid temperature† (°C)	4-40	4–40	4–40	4–40
Maximum liquid pressure, bar‡	4	4	4	4
Estimated shelf life (months)	18	18	18	18

* The mechanical compression factor varies depending on the medium.

† The temperature difference between the fluid running through the column and the ambient temperature in the room should never be greater than 20°C.

‡ While the maximum liquid pressure stated depends on the pressure rating of the column, restrictions for the maximum pressure drop over the column depend on the packed chromatography medium, in order to ensure bed stability. See User Manual for details.

The most important characteristics of the ReadyToProcess columns are listed in Table 2.

On delivery, ReadyToProcess columns are ready for immediate use. The columns are packed in clean-room environment (class ISO 8) using validated packing protocols. To guarantee a well-packed column, each individual ReadyToProcess column is qualified by efficiency testing, that is, by analysis of theoretical plates per m packed bed (N/m) and asymmetry factor (A_s), as a part of the production procedure. Acceptance limits have been established for efficiency testing at 100 cm/h and the analysis results are specified in the Certificate of Analysis accompanying each column. After qualification, the columns are sanitized and equilibrated with storage solutions.

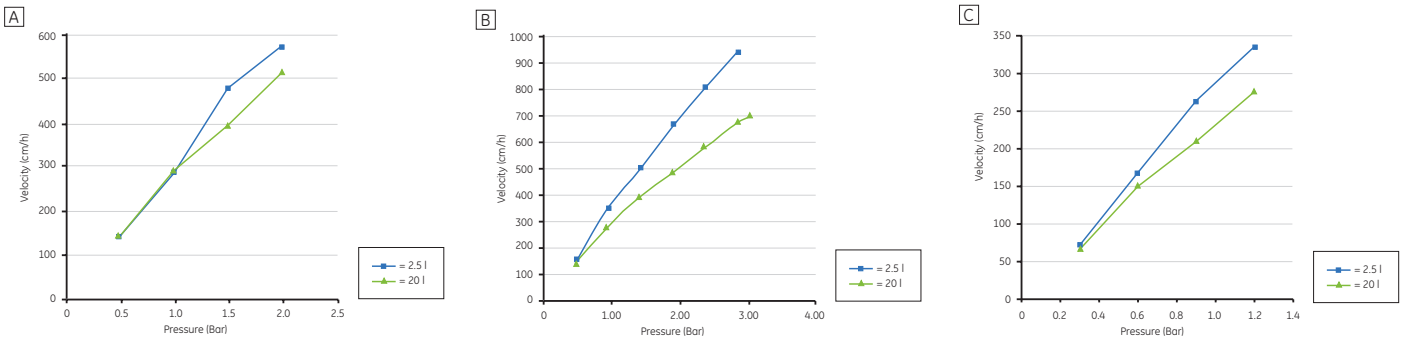

Fig 3. Examples of pressure/flow curves for 2.5 and 20 l ReadyToProcess columns prepacked with **(A)** MabSelect SuRe, **(B)** Capto adhere, and **(C)** Phenyl Sepharose 6 Fast Flow (low sub).

The sanitization procedure removes both micro-organisms, including spore-forming organisms, and endotoxins. The columns are sampled for endotoxin analysis (acceptance limit is <0.25 EU/ml) and microbiology growth (CFU<10/100 ml). The results including the curve from the efficiency test as well as the endotoxin and microbiology analysis results are presented in the Certificate of Analysis, which is a part of the Product Documentation accompanying each column. As a last step, the column is equilibrated in 20% ethanol (20% ethanol with 0.2 M sodium acetate, pH 5.5 when applicable). There is no need to repeat either the efficiency test or the sanitization procedure.

Transport simulation studies

Transport simulation studies were performed at a certified testing facility (Packforsk AB) as follows: Vibration testing (IEC 68-2-6), Shock testing (IEC 68-2-27), and Drop testing (IEC 68-2-31).

Four column sizes, ReadyToProcess 1 l, ReadyToProcess 2.5 l, ReadyToProcess 10 l, and ReadyToProcess 20 l, were subjected to testing and the asymmetry factor and plate number were measured.

Acceptance criteria for the testing procedure performed at a flow velocity of 30 cm/h were set at 3700 N/m (N = number of theoretical plates) for Capto Q, Capto S, and Phenyl Sepharose 6 FF (low sub); 3900 for MabSelect SuRe, and 4400 for Capto adhere. The asymmetry factor should be within the range 0.8 to 1.8, both before and after the testing.

The results in Figure 4 show that these parameters lie within the set limits, demonstrating that ReadyToProcess columns are stable and robust and can be transported without effect on their performance.

BioProcess media characteristics

BioProcess media are specifically designed to meet the demands of industrial biotechnology. This means that the medium is scalable from laboratory to production, is produced with validated manufacturing procedures, and can withstand standard CIP and sanitization-in-place procedures.

In addition, BioProcess media are supported with Regulatory Support Files (RSF) and comprehensive documentation, as well as security of supply service.

Characteristics of some of the chromatography media available in ReadyToProcess columns are listed in Table 3. Detailed information about each medium is available in the respective BioProcess medium data file.

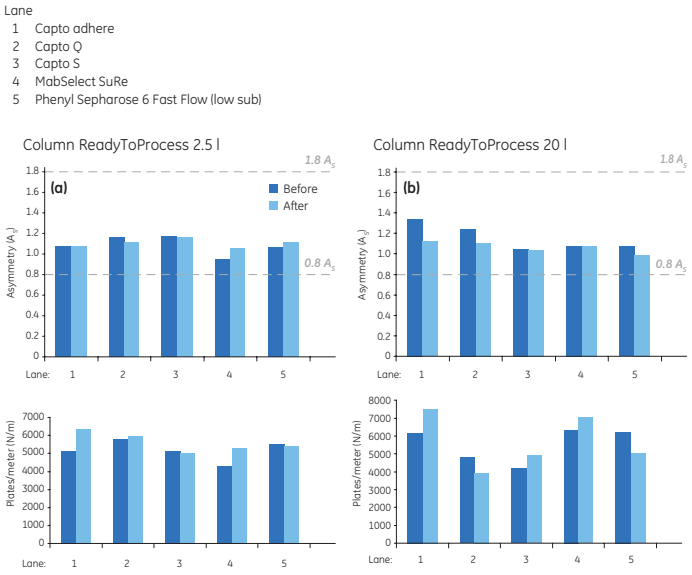

Fig 4. Transport simulation studies on ReadyToProcess 2.5 l (a) and ReadyToProcess 20 l (b) columns show that both the number of theoretical plates, N/m, and the Asymmetry factor, A_s, were within the predefined ranges after testing.

Table 3. Characteristics of some of the chromatography media available in ReadyToProcess columns

	MabSelect SuRe	Capto Q	Capto S	Capto adhere	Phenyl Sepharose 6 Fast Flow (low sub)
Matrix	Rigid, highly cross-linked agarose	Rigid, highly cross-linked agarose with dextran surface extenders	Rigid, highly cross-linked agarose with dextran surface extenders	Rigid, highly cross-linked agarose	Highly cross-linked agarose
Average particle size	85 µm	90 µm	90 µm	75 µm	90 µm
Functional group	Alkali-stabilized protein A-derived	Strong anion exchanger (Q-type)	Strong cation exchanger (S-type)	Multimodal strong anion exchanger	Phenyl
Dynamic binding capacity data	≥ 30 mg human IgG/ml medium at 2.4 min residence time	> 100 mg BSA/ml	> 120 mg lysozyme/ml medium	NA	24 mg HSA/ml
pH working range	3–12	2–12	4–12	3–12	3–13
Cleaning-in-place stability	0.1–0.5 M NaOH	2–14	3–14	2–14	2–14

Regulatory Product Documentation

Each ReadyToProcess column is accompanied with an extensive documentation package to help customers register a production process containing a chromatography step on a ReadyToProcess column. The documentation is divided into three parts.

- **Product Documentation** – A certificate of conformance is provided, showing each wetted material's conformance with 21CFR177, USP Class VI, and animal-free origin (or EMEA/410/01). The certificate of conformance ensures full traceability of materials. The product documentation also contains a certificate of analysis showing packing performance as well as endotoxin and microbiology test results for the delivered column. The documentation is delivered with each column.
- **Regulatory Support Files (RSF) Addendum** – Gives access to product information of the ReadyToProcess column including stability and quality, as well as a brief description of the preparation.
- **RSF** – current RSF includes additional information on each BioProcess chromatography medium.

RSF Addenda and RSF are available at www.gelifesciences.com/rsf

Scale-up study

A study was performed to verify that the results of a protein separation experiment give the same result regardless of column size or chromatography system used. A mixture of two proteins, bovine serum albumin, BSA, (M_r 66 000) and lactoferrin (M_r 90 000), was applied to columns of different sizes, and eluted. The elution peaks in the resulting chromatograms were compared. The columns were XK 16/40 packed with Capto S and BPG packed with 1.5 l Capto S (both to a to a bed height of 20 cm), ReadyToProcess Capto S 2.5, ReadyToProcess Capto S 10, and ReadyToProcess Capto S 20.

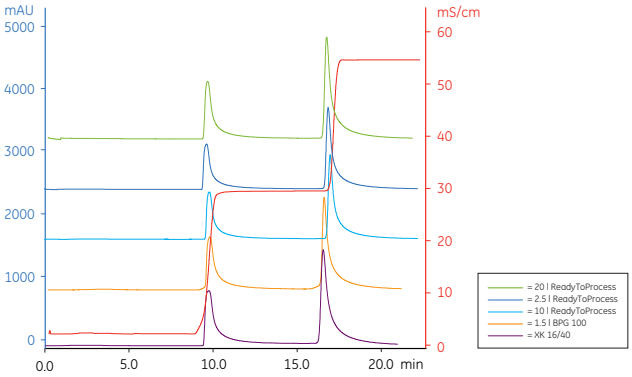

Fig 5. Stacked chromatogram comparing step elution on the five different columns. The elution buffers were 50 mM sodium acetate, 0.3 M NaCl, pH 5.0 and 50 mM sodium acetate, 0.65 M NaCl, pH 5.0. The elution steps were 3 CV each. The chromatograms were obtained using ÄKTAready system, except for XK 16/40 which was run on an ÄKTAexplorer™ system.

The results indicate that scale-up from an XK 16/40 to the ReadyToProcess columns was possible and the results were similar regardless of the chromatography system used (Fig 5).

ReadyToProcess columns in the purification of monoclonal antibodies (MAbs)

When choosing a process for large-scale purification, the possibility to scale up operations without too much process development is important.

To further demonstrate the scalability and assess the overall performance of ReadyToProcess columns, they were compared with an established small-scale format (XK 16) in the purification of a MAb from cell culture supernatant. The processes were run side-by-side using a generally applicable three-step process consisting of MabSelect SuRe, Capto Q, and Capto adhere. The ReadyToProcess columns behaved similarly to the XK 16/40 columns in all aspects studied, demonstrating that the purification process is directly scalable between XK and ReadyToProcess.

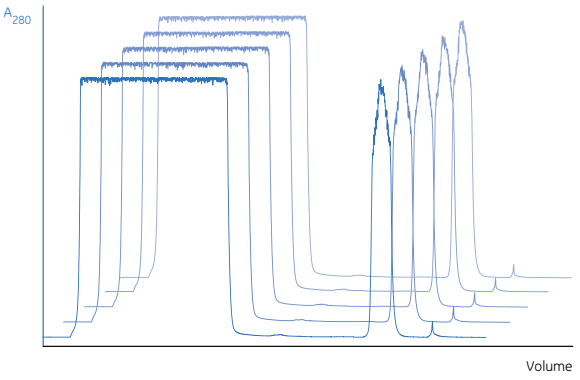

Fig 6. Overlay chromatogram of MabSelect SuRe, cycle 1-5.

To investigate the effects of multiple runs on column performance, the MabSelect SuRe columns were run five times consecutively (Fig 6). All chromatograms were practically identical, showing that multiple runs with CIP between cycles could be run with retained performance.

Operation

Fast method development – fully scalable

The matrices used in ReadyToProcess columns are also available as bulk media. Fast method development can be achieved using Tricorn™ or XK columns for the first experiments. After optimizing the purification at laboratory scale, the process can be scaled up by keeping the residence time constant in order to maintain capacity. This can be achieved by increasing the column diameter and keeping the mobile phase velocity and sample-to-bed volume ratio constant.

Scale-up is typically performed by keeping bed height and liquid velocity (cm/h) constant (i.e., constant residence time) while increasing column bed diameter and flow rate (l/min). Yield and clearance of critical impurities may change when column bed height or residence time is changed and should be validated using the final bed height.

Storage

ReadyToProcess columns are delivered packed with chromatography media in a storage solution consisting of 20% ethanol. ReadyToProcess Capto S columns are delivered in 20% ethanol and 0.2 M sodium acetate pH 5.5.

All columns, except ReadyToProcess MabSelect SuRe, are preferably stored at room temperature but can also be stored in a cold room (the storage temperature range for these columns is 4°C to 30°C). ReadyToProcess MabSelect SuRe columns should be stored at 4°C to 8°C.

The column needs to be washed to clear it from the storage solution before starting the purification process. The wash will also adjust the temperature of the column to the working temperature.

Equipment

ReadyToProcess columns are intended for use with ÄKTAready™ chromatography system, but can also be used with standard chromatography systems, for example ÄKTAprocess™. ReadyToProcess 1 l and 2.5 l columns can also be used with ÄKTApilot™ systems within a limited liquid velocity range. Alarm setting of pressure must be set in order not to exceed the maximal pressure for the packed column.

Ordering information

ReadyToProcess Columns

Product	Column size	Code no.
ReadyToProcess Capto Q 1	1 l	28-9510-90
ReadyToProcess Capto Q 2.5	2.5 l	28-9017-23
ReadyToProcess Capto Q 10	10 l	28-9017-24
ReadyToProcess Capto Q 20	20 l	28-9017-25
ReadyToProcess Capto S 1	1 l	28-9510-93
ReadyToProcess Capto S 2.5	2.5 l	28-9017-29
ReadyToProcess Capto S 10	10 l	28-9017-30
ReadyToProcess Capto S 20	20 l	28-9017-31
ReadyToProcess Capto adhere 1	1 l	28-9511-09
ReadyToProcess Capto adhere 2.5	2.5 l	28-9017-14
ReadyToProcess Capto adhere 10	10 l	28-9017-15
ReadyToProcess Capto adhere 20	20 l	28-9017-16
ReadyToProcess MabSelect SuRe 1	1 l	28-9511-10
ReadyToProcess MabSelect SuRe 2.5	2.5 l	28-9017-17
ReadyToProcess MabSelect SuRe 10	10 l	28-9017-18
ReadyToProcess MabSelect SuRe 20	20 l	28-9017-19
ReadyToProcess Phenyl Sepharose 6 FF (low sub) 1	1 l	28-9511-11
ReadyToProcess Phenyl Sepharose 6 FF (low sub) 2.5	2.5 l	28-9017-35
ReadyToProcess Phenyl Sepharose 6 FF (low sub) 10	10 l	28-9017-36
ReadyToProcess Phenyl Sepharose 6 FF (low sub) 20	20 l	28-9017-37
ReadyToProcess Capto MMC 1	1 l	28-9511-18
ReadyToProcess Capto MMC 2.5	2.5 l	28-9291-20
ReadyToProcess Capto MMC 10	10 l	28-9291-21
ReadyToProcess Capto MMC 20	20 l	28-9291-22
ReadyToProcess Q Sepharose FF 1	1 l	28-9511-25
ReadyToProcess Q Sepharose FF 2.5	2.5 l	28-9290-76
ReadyToProcess Q Sepharose FF 10	10 l	28-9290-79
ReadyToProcess Q Sepharose FF 20	20 l	28-9290-82
ReadyToProcess SP Sepharose FF 1	1l	28-9510-97
ReadyToProcess SP Sepharose FF 2.5	2.5 l	28-9291-05
ReadyToProcess SP Sepharose FF 10	10 l	28-9291-06
ReadyToProcess SP Sepharose FF 20	20 l	28-9291-07
ReadyToProcess DEAE Sepharose FF 1	1 l	28-9511-26
ReadyToProcess DEAE Sepharose FF 2.5	2.5 l	28-9291-14
ReadyToProcess DEAE Sepharose FF 10	10 l	28-9291-15
ReadyToProcess DEAE Sepharose FF 20	20 l	28-9291-16

Application notes	Code no.
Efficiency test of ReadyToProcess columns	28-9198-21
Purification of a monoclonal antibody using ReadyToProcess columns	28-9198-56

Data files	Code no.
ÄKTAready	28-9159-86
Capto adhere	28-9078-88
Capto MMC	11-0035-45
Capto Q and Capto S	11-0025-76
MabSelect SuRe	11-0011-65
Phenyl Sepharose 6 Fast Flow (low sub)	18-1020-53
Sepharose Fast Flow ion exchangers	18-1020-66

For local office contact information, visit
www.gelifesciences.com/contact

www.gelifesciences.com/ReadyToProcess

GE Healthcare Bio-Sciences AB
Björkgatan 30
751 84 Uppsala
Sweden

imagination at work

GE, imagination at work, and GE monogram are trademarks of General Electric Company.

ÄKTAexplorer, ÄKTApilot, ÄKTAprocess, ÄKTAready, BioProcess, BPG, Capto, Drop design, MabSelect SuRe, ReadyToProcess, Sepharose, and Tricorn are trademarks of GE Healthcare companies.

Separating viral particles with Capto Q products may require a license under United States patent number 6,537,793 B2 and equivalent patents and patent applications in other countries owned by Centelion SAS. Such a license is not included with the purchase of Capto Q but is included with the purchase of Capto ViralQ products.

The Tricorn column and components are protected by US design patents USD500856, USD506261, USD500555, USD495060 and their equivalents in other countries.

All third party trademarks are the property of their respective owners.

© 2007–2009 General Electric Company—All rights reserved
First published Sept. 2007.

All goods and services are sold subject to the terms and conditions of sale of the company within GE Healthcare which supplies them. A copy of these terms and conditions is available on request. Contact your local GE Healthcare representative for the most current information.

GE Healthcare UK Limited, Amersham Place,
Little Chalfont, Buckinghamshire, HP7 9NA
UK

GE Healthcare Europe, GmbH
Munzinger Strasse 5, D-79111 Freiburg
Germany

GE Healthcare Bio-Sciences Corp.
800 Centennial Avenue, P.O. Box 1327, Piscataway, NJ 08855-1327
USA

GE Healthcare Bio-Sciences KK
Sanken Bldg., 3-25-1, Hyakunincho, Shinjuku-ku, Tokyo 169-0073
Japan

28-9159-87 AC 07/2009

MILLIPORE™

Data Sheet

Mobius® FlexReady Solution for TFF

Fast setup. Maximum adaptability. Pre-designed and optimized.

Part of the Mobius FlexReady family of application-specific solutions, the Mobius FlexReady Solution for Tangential Flow Filtration (TFF) is an easy-to-use system featuring an optimized single-use flowpath, and is designed to fully support your TFF needs. The system uses Millipore's leading Pellicon® cassettes, which are ideally suited for purification or concentration/diafiltration of monoclonal antibodies, vaccines and therapeutic proteins.

The Mobius FlexReady Solution for TFF consists of single-use Flexware® assemblies, innovative separation devices and process-ready hardware systems to deliver optimal operational flexibility, from process development to clinical production to small-scale commercial manufacturing. Accompanied by extensive Millipore support and services, the Mobius FlexReady Solution for TFF can help you maximize resource productivity and reduce risk.

- Fast setup of hardware with easy installation of optimally designed Flexware assemblies
- Maximum adaptability to your changing operational needs with single-use flowpaths
- Pre-designed and optimized for TFF to give you confidence and peace of mind

MOBIUS®

MODULAR, OPTIMIZED DESIGN

Mobius FlexReady Solutions are ergonomically designed for fast setup, maximum adaptability to changing process needs and reduced operator error. Specially designed hardware conveniently holds filters and containers, right where you need them. The modular, interlocking multi-cart design lets you easily and safely move your system from one space to another. The filter end cart is designed to work with all Mobius FlexReady Solutions, leveraging your investment in capital equipment and maximizing resource utilization.

Figure 1. **The filter end cart works with all Mobius FlexReady Solutions for optimum equipment utilization.**

Figure 2. **Hardware system components move and connect easily for maximum mobility.**

TWO SYSTEMS FOR OPTIMUM SCALABILITY

The TF-1 system contains a 10L retentate recycle container and, in typical conditions, will use Pellicon cassettes of up to 0.5 m^2 filtration area. The TF-2 system is designed with a 50L retentate recycle container and, in typical conditions, will use Pellicon cassettes of up to 2.5 m^2 filtration area.

- Designed for minimum working volume and high recovery of protein at high concentrations
- Novel retentate recycle container with levitating magnetic impeller, retentate divertor, and vortex breaker for efficient mixing
- Retentate recycle tank mounted on load cells and integrated transfer pump to enable fed batch and constant volume diafiltration operations
- Innovative low dead volume t-connectors, enabling the use of traditional pressure transducers
- Flexware assemblies designed to fit the hardware and install quickly and easily
- Constant ΔP and constant feed flow (calculated) operation
- Ease of operation with an intuitive touch screen interface and user-defined process and alarm set points

Tank Designed for Efficient Mixing

The retentate recycle tank is specifically designed for efficient concentration and diafiltration of proteins. An innovative single-use process container design incorporates a magnetically coupled levitating impeller, ensuring efficient mixing at high tank levels.

The Mobius FlexReady Solution for TFF provides maximum adaptability to your changing process needs, such as varying volume levels. The low-point retentate return with patented retentate diverter plate and vortex breaker on the container outlet, reduces air entrapment and ensures efficient mixing at low tank levels. The retentate recycle tank is mounted on load cells to enable fed-batch operation, diafiltration and final concentration based on set-point input.

Figure 3. **A pivoting retentate recycle tank design facilitates container loading.**

Low Dead Volume T-connector

The Mobius FlexReady Solution for TFF features our innovative low dead volume t-connector built into the flowpath which is designed for use with traditional pressure transducers. A LLDPE septum provides the barrier between the process fluid and the transducer thereby eliminating the risk of contamination.

Figure 4. **The innovative low dead volume t-connector prevents pressure sensor contact with the fluid path.**

Pellicon® Cassettes

Pellicon cassettes are the optimum tangential flow filtration (TFF) devices for solutions containing monoclonal antibodies, therapeutic proteins, albumin, hormones, vaccines and growth factors. These advanced, high-performance cassettes are ideal for today's higher titer therapeutic antibodies as well as the more demanding filtration processes that require greater operating pressures and temperatures.

Figure 5. **Pellicon Cassettes are ideal for higher titers and more demanding filtration processes.**

Easy and Intuitive Operation

An intuitive, touch screen interface, makes the Mobius FlexReady Solution for TFF easy to operate. The system uses a combination of configurable process alarm set points and automated data acquisition. Transmembrane pressure (TMP) can be set with the help of an automated pressure control valve, and controlled through the touch screen interface along with set point operation for constant pump speed or constant ΔP.

The system features a user-configurable set point for controlling tank volume during fed batch processing and diafiltration, as well as a final tank volume end point during ultrafiltration. The TMP value is calculated and shown on the main piping and instrumentation diagram (P&ID) on the interface screen.

The onscreen P&ID provides an easy way to monitor your process in real time, including pump speed, mixer speed, feed, retentate and filtrate pressures, tank temperature, calculated feed flow rate, ΔP, TMP, calculated filtrate flow rate, and totalized filtrate weight (requires optional weigh scale). A separate screen shows key process parameter changes over the course of the run.

Figure 6. **The Automated Pressure Control Valve (PCV) features a clear outer door enabling a clear view during operation. If the door is opened during operation, the valve automatically shuts off ensuring operator safety.**

Simple Data Management

The system automatically captures time-stamped data for the active parameters and separately logs the alarm and event history. These tab delimited/CSV files can be uploaded directly to your computer. The standard design includes a Profibus card allowing data export to a DCS. The data can also be exported to meet 21CFR Part 11 compliance. An option is available to allow data export through an Ethernet IP protocol.

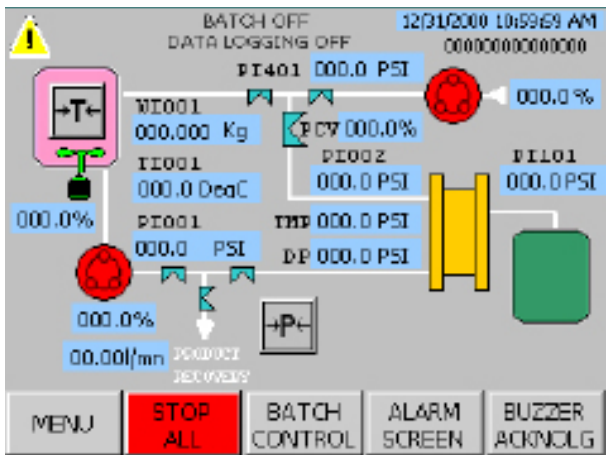

Figure 7. **The P&ID provides real-time display of all active parameters.**

Standardized Configurations for Reliable Results

The flowpath has been carefully designed and tested by our design and applications engineers, resulting in a consistent, standardized flowpath. You are guaranteed that the flowpath is designed to fit the system and your TFF needs. The flowpath (See Fig. 8) consists of:

- Core Flexware assemblies which includes the transfer manifold line and vent filter, retentate recycle container, retentate and feed lines, retentate flush line, and filtrate drain line
- Sterilizing-grade filter assembly for final collection with sampling bag and NovaSeal™ Crimping Sleeve for sterile disconnect
- Optional Flexware assemblies including process containers for source, NaOH, buffer, WFI, filtrate, and waste, and integrity tester (IT) connector line
- Pellicon cassettes

Figure 8. TFF Flowpath

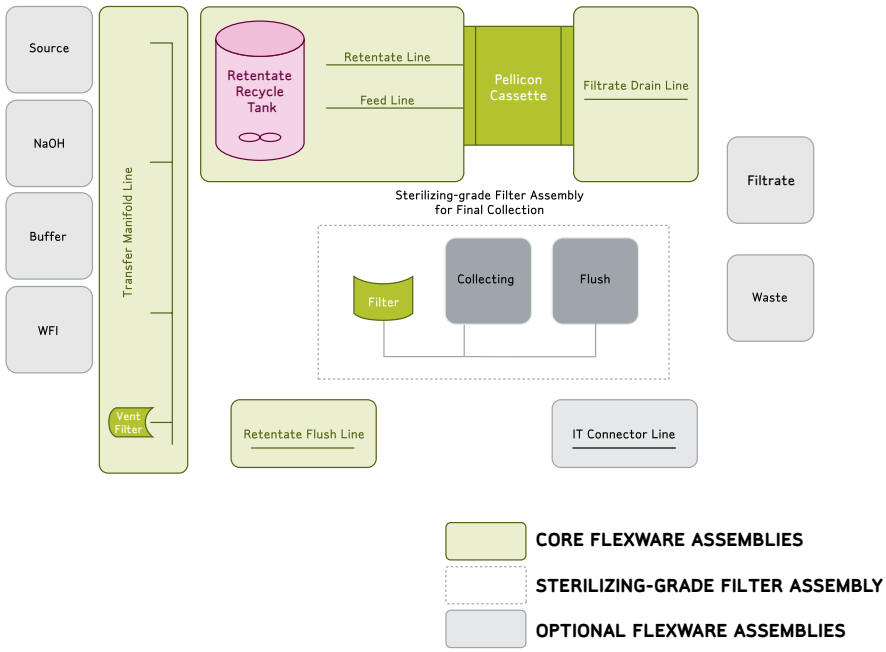

Select from Standard Flowpath Configurations for Each System

	TF-1	TF-2
Core Flexware Assemblies	10L retentate recycle container	50L retentate recycle container
Sterilizing-grade filter assembly for final collection	5L or 10L collecting container featuring Opticap® XL 600 capsule with Millipore Express® SHC membrane	10L or 20L collecting container featuring Opticap® XL 600 capsule with Millipore Express® SHC membrane
Process container for source	10L, 20L, 50L	50L, 250L
Process container for NaOH	10L, 20L, 50L	250L, 500L, 1,000L
Process container for buffer	10L, 20L, 50L	250L, 500L, 1,000L
Process container for WFI	10L, 20L, 50L, 250L	250L, 500L, 1,000L
Process container for filtrate	10L, 20L, 50L	250L (accommodates up to 2 process containers for filtrate)
Process container for waste	250L	1,000L
Pellicon 2 cassettes	0.1 m^2 (1-5 cassettes)	0.5 m^2 (1-5 cassettes)
		2.5 m^2 (1 cassette)
Pellicon 3 cassettes	0.11 m^2 (1-4 cassettes)	0.56 m^2 (1-4 cassettes)
		1.14 m^2 (1-2 cassettes)

SPECIFICATIONS

	TF-1		TF-2	
Recommended Operating Parameters				
Retentate recycle tank	10L		50L	
Flowrate	0.4 - 4.0 L/min		2 – 18 L/min	
Surface area Pellicon 2	0.1 – 0.5 m^2		0.5 - 2.5 m^2	
Surface area Pellicon 3	0.11 – 0.44 m^2		0.56 – 2.28 m^2	
Min. working volume (based on feed flow of 8 L/min/m^2) *Min. working volume is the volume in the retentate recycle container, feed line, Pellicon filters, and retentate line.* *Min. working volume is a function of the membrane surface area and the feed flowrate.*	320 mL @ 0.1 m^2 490 mL @ 0.5 m^2		1,350 mL @ 0.5 m^2 2,400 mL @ 2.5 m^2	
Fluid operating temperature	20 - 45 °C (68 - 113 °F)			
Max. operation pressure	50 psi (3.45 bar)			
Environmental Requirements	20-25 °C, (68 - 113 °F) Relative humidity 10-90% (non condensing)			
Utilities				
Supply voltage	100 - 110 VAC, 50/60 Hz, 1 phase	230 VAC, 50/60 Hz, 1 phase	200 - 208 VAC, 50/60 Hz, 3 phase	400 VAC, 50/60 Hz, 3 phase
Compressed Air/N2	Clean, dry air or nitrogen source at 3.5 to 6.0 bar (50 – 90 psi) for connecting to Integritest® 4 and for bag inflation			
Instrumentation				
Filtrate weigh scale (optional)	up to 60 kg (132.3 lbs)		up to 600 kg (1,328 lbs)	
Pressure transducer	Sanitary diaphragm pressure transducer located at retentate and filtrate lines			
High pressure cut-off switch	Sanitary diaphragm pressure transducer located at feed and transfer pump outlet			
Temperature sensor	Located at retentate recycle container outlet			
Weight load cells	Located at retentate recycle tank (qty. of 4)			

Control Modes: Operations will be supervised by alarm setpoints	
Set point	**Details**
Constant ΔP ($P_{feed} - P_{retentate}$)	Operate at constant ΔP or calculated constant feed flow rate
Constant TMP $\frac{(P_{feed} + P_{retentate})}{2} - P_{filtrate}$	Operate at constant TMP or retentate pressure
Constant retentate tank weight	For fed batch concentration, for constant-volume diafiltration
Cumulative filtrate	For concentration or diafiltration endpoint determination volume/weight

Languages Supported
English

Weight (Approx.)		
Filter support kit	10 kg (22 lbs)	30 kg (66.1 lbs)
Pump cart	330 kg (727.5 lbs)	
Filter cart	150 kg (330.7 lbs)	
Manifold plate	5 kg (11 lbs)	

Dimensions (H x W x D)	
Pump cart	1910 x 1250 x 800 mm (75.1 x 49.2 x 31.5 in.)
Filter cart	1050 x 1100 x 800 mm (41.3 x 43.3 x 31.5 in.)

SPECIFICATIONS

	TF-1	TF-2
Materials of Construction (product contact)		
Pellicon cassette liners	UDEL P-1700	Polysulfone
Process container	ULDPE (PureFlex™ film)	
Low dead volume t-connector	LLDPE film (septum), Polysulfone (body nut), LLDPE (Gauge Protector), Silicone (o-ring)	
Tubing	Nylon-braided silicone, Bioprene®, Platinum-cured silicone tubing	
Fittings	Polypropylene, HDPE, polysulfone, silicone o-rings/gaskets, polyvinylidene difluoride	
Connectors	Polypropylene, silicone	
Filters	See individual datasheets	

Materials of Construction (non-product contact)	
Retentate recycle tank	HDPE
Frame	Stainless steel 304L
Panels	Stainless steel 304L, Epoxy coating PMS233
Drip tray	Stainless steel 304L
Non-painted exposed surfaces, e.g. shelves, installation bar, installation support, handle bars	Stainless steel 304L Polished 220 grid
Bench	Laminated glass
Pellicon holder	Stainless steel 316L
Trays/bins	Polyethylene
NovaSeal crimp	Nickel-coated brass
Wheels	Nylon non-marking wheels with locks
Low dead volume t-connector	Polysulfone (body nut), nylon (washer), PVC (plug)
Manifold Plate	
Plate	Polycarbonate
Supports	Stainless steel 316L
Pinch valves	Glass-reinforced nylon
Filter Support Kit	
Frame	Stainless steel 304L
Support	Stainless steel 304L/316L
Holder nuts	Bronze
Pinch valves	Glass-reinforced nylon
Filtrate Weigh Scale (Optional)	
60 kg (132.3 lbs)	Stainless steel 316TI
600 kg (1,328 lbs)	Stainless steel 304

Flexware Assemblies
Mobius Bronze Certification: Each assembly is exposed to a gamma irradiation level of 25-40 kGy.
Component materials meet criteria for USP<88> Biological Reactivity Test, Class VI Plastics. Flexware assemblies are compliant with EMEA410/01 Rev. 2.

Regulatory Information
The system is manufactured according to the ISO® 9001 quality standard.
The system is designed to be compliant with CE and EN 60204.

ORDERING INFORMATION

Description	Catalogue No.
Core Hardware System	
The core hardware system includes the pumping cart, filter cart with 2 trays (10L and 50L), and filter supports.	
Mobius FlexReady System, TF-1 (10L retentate recycle tank)	
100-110VAC 50/60Hz 1 phase (North American)	MBSTA1
230VAC 50/60Hz 1 phase (European)	MBSTA2
Mobius FlexReady System, TF-2 (50L retentate recycle tank)	
200 - 208VAC, 50/60Hz 3 phase (North American)	MBSTB1
400VAC 50/60Hz 3 phase (European)	MBSTB2
Hardware Accessories	
Collapsible Containers	
250L bin (holds 100L or 250L process containers)	MBSACC006U
1,000L bin (holds 500L, 750L, or 1,000L process containers)	MBSACC007U
Containment trays	
10L tray (holds 5 or 10L process containers)	MBSACC005U
50L tray (holds 20L or 50L process container)	MBSACC004U
Filtrate Weigh Scale	
60 kg (132.3 lbs) for TF-1	MBSACC019U
600 kg (1,328 lbs) for TF-2	MBSACC020U

Description	Catalogue No.
Services	
Choose from a suite of services, including installation, commissioning validation, training and annual performance review to meet your specific processing requirements. All services are performed by Mobius FlexReady services certified engineers.	
Factory Acceptance Testing	SVCMBSTFAT
Installation and Operational Qualification Protocol Performance Zone* 1	SVCMBSTIQOQZ1
Installation and Operational Qualification Protocol Performance Zone* 2	SVCMBSTIQOQZ2
Installation and Operational Qualification Protocol Performance Zone* 3	SVCMBSTIQOQZ3
Installation and Operational Qualification Protocol, TF-1	DOCMBST1IQOQ
Installation and Operational Qualification Protocol, TF-2	DOCMBST2IQOQ
Annual Performance Review Zone* 1	SVCMBSTAPRZ1
Annual Performance Review Zone* 2	SVCMBSTAPRZ2
Annual Performance Review Zone* 3	SVCMBSTAPRZ3

** For Zone and pricing information, contact your local Millipore representative.*

Flexware Assemblies (Pellicon cassettes sold separately)

For flowpath drawing, see Fig. 7 on pg. 4. Consult with your sales representative to configure your TFF flowpath using standard, optimized options.

Each system has a dedicated flowpath, and the flowpath components are not interchangeable between TF-1 and TF-2. Ensure you order the flowpath for the hardware system you have selected.

Pellicon Cassettes

All Pellicon cassettes must be purchased separately. See datasheets DS1324EN00 Rev. B, DS1209EN00 (Pellicon 3) and DS1210EN00 (Pellicon 2) for ordering information.

NovaSeal Crimping Solution

The flowpath includes the NovaSeal Crimping Sleeve for sterile disconnect of sample containers. The NovaSeal Crimping Tool is sold separately. See datasheet DS1040EN00 Rev. B for ordering information.

TO PLACE AN ORDER OR RECEIVE TECHNICAL ASSISTANCE

For additional information call your nearest Millipore office:

In the U.S. and Canada, call toll-free
1-800-MILLIPORE (1-800-645-5476)

In the U.S., Canada and Puerto Rico, fax orders to
1-800-MILLIFX (1-800-645-5439)

Outside of North America contact your local office.

To find the office nearest you: **www.millipore.com/offices**

Internet: **www.millipore.com**

Technical Service: **www.millipore.com/techservice**

MILLIPORE™

www.millipore.com/mobius

ADVANCING LIFE SCIENCE TOGETHER™
Research. Development. Production.

Millipore, Mobius, Flexware, Pellicon, Integritest, and Millipore Express are registered trademarks of Millipore Corporation. ISO is a registered trademark of the International Standards Organization. Bioprene is a registered trademark of Watson-Marlow Ltd.
The M mark and Advancing Life Science Together, PureFlex and NovaSeal are trademarks of Millipore Corporation.
Lit. No. DS3125EN00 Rev. D 09/11 DP SBU-09-01518 Printed in U.S.A.
© 2011 Millipore Corporation, Billerica, MA 01821 U.S.A. All rights reserved.